THOMSON 52RH44

MODEL

SERVICE MANUAL

THOMSON MULTI MEDIA

Brandt FERGUSON SABA **TELEFUNKEN** **THOMSON**

TV

SERVICE MANUAL
DOCUMENTATION TECHNIQUE
TECHNISCHE DOKUMENTATION
DOCUMENTAZIONE TECNICA
DOCUMENTACION TECNICA

RP C19 100 Hz 4/3 - 16/9

Addition to SM 350 645 90
Additif au SM
Ergänzung zum SM
Aggiornamento del SM
Suplemento al SM

IC19 B5KA08P004 —
M5MA0BP104
M5MA08P004

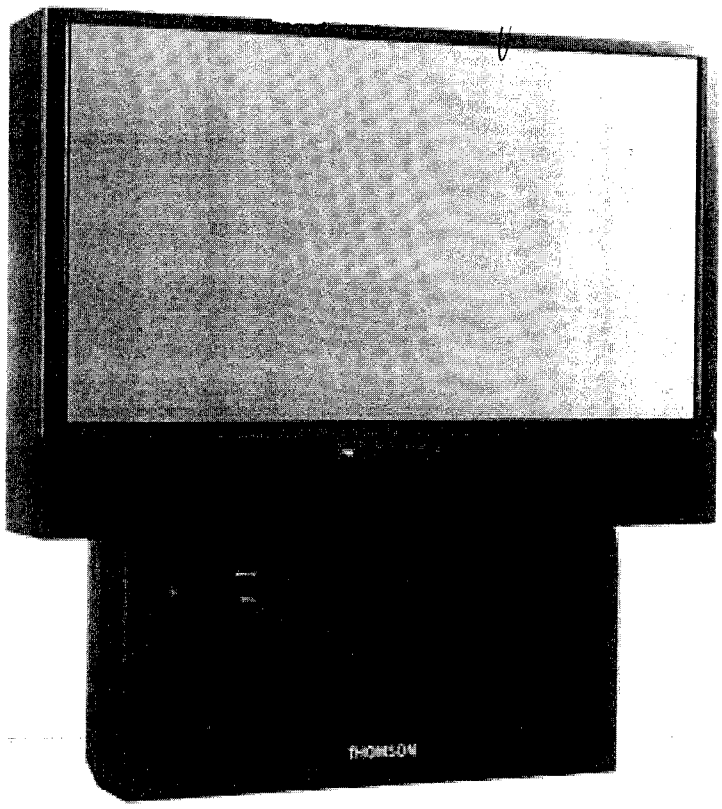

WARNING : *Before servicing this chassis read the safety recommendations.*
ATTENTION : *Avant toute intervention sur ce châssis, lire les recommandations de sécurité.*
ACHTUNG : *Vor jedem Eingriff auf diesem Chassis, die Sicherheitsvorschriften lesen.*
ATTENZIONE : *Prima di intervenire sullo chassis, leggere le norme di sicurezza.*
IMPORTANTE : *Antes de cualquier intervención, leer las recomendaciones de seguridad.*

Code : 350 896 40 - 0799 / 8.5M - RPC19 Print. ROSSEELS PRINTING : 01 53 01 11 11

No copying, translation, modification on other use authorized. All rights reserved worldwide. • Tous droits de reproduction, de traduction, d'adaptation et d'exécution réservés pour tous les pays. • Sämtliche Urheberrechte an diesen Texten und Zeichnungen stehen uns zu. Nachdrucke, Vervielfältigungen - auch auszugsweise - nur mit unserer vorherigen Zustimmung zulässig. Alle Rechte vorbehalten. • I diritti di riproduzione, di traduzione, e esecuzione sono riservati per tutti i paesi. • Derechos de reproduccion, de traduccion, de adaptacion y de ejecucion reservados para todos los paises.

⚠ Do not disconnect modules when they are energized!
Repairs on power supply section are to be carried out only with isolating transformer.

Ne pas retirer les modules lorsqu' ils sont sous tension. N'effectuer les travaux de maintenance sur la partie reliée au secteur (Switch Mode) qu'au travers d'un transformateur d'isolement.

Module nicht bei eingeschaltetem Gerät entfernen!
Servicearbeiten am Netzteil nur unter Verwendung eines Regeltrenntrafos durchführen.

Non scollegare le piastre quando sono alimentate!
Per le riparazioni sulla sezione alimentatore, utilizzare un trasformatore isolatore.

No desconectar los módulos cuando están activados. Las reparaciones en la sección de alimentación de energía deben ser ejecutadas solamente con un transformador de separación.

⚠ Indicates critical safety components, and identical components should be used for replacement. Only then can the operational safety be garanteed.

Le remplacement des éléments de sécurité (repérés avec le symbole ⚠) par des composants non homologués selon la Norme CEI 65 entraine la non-conformité de l'appareil. Dans ce cas, la responsabilité du fabricant n'est plus engagée.

Wenn Sicherheitsteile (mit dem Symbol ⚠ gekennzeichnet) nicht durch Original - Ersatzteile ersetzt werden, erlischt die Haftung des Herstellers.

La sostituzione dei componenti di sicurezza (evidenziati con il segno ⚠) con componenti non omologati secondo la norma CEI 65 comporta la non conformitá dell'apparecchio. In tal caso è "esclusa la responsabilità " del costruttore.

La sustitución de elementos de seguridad (marcados con el simbolo ⚠) por componentes no homologados segun la norma CEI 65, provoca la no conformidad del aparato. En ese caso, el fabricante cesa de ser responsable.

MEASUREMENT CONDITIONS - CONDITIONS DE MESURES - MESSBEDINGUNGEN
CONDIZIONI DI MISURA - CONDICIONES DE MEDIDAS

RECEIVER :
On UHF,input level : 1 mV, bar test pattern :
- PAL, I standard. 100% white.

Via the scart socket, input level : 1 Vpp, bar test pattern :

Colour, contrast and brightness at mid-position, sound at minimum.
Programme selected : PR 01.

DC voltages measured between the point and earth using a digital voltmeter.

RECEPTEUR :
En UHF, niveau d'entrée 1 mV mire de barres
- SECAM, Norm L, Blanc 100%.

Par la prise Péritélévision, niveau d'entrée 1 Vcc, mire de barres .

Couleur, contraste, lumière à mi-course, son minimum.
Programme affecté PR 01.

Tensions continues relevées par rapport à la masse avec un voltmètre numérique.

EMPFÄNGER :
Bei UHF Eingangspegel 1 mV, Farbbalken :
- PAL, Norm G, Weiss 100%.

Über die Scartbuchse : Eingangspegel 1 Vss, Farbbalken :

Farbe, Kontrast, Helligkeit in der Mitte des Bereichs, Ton auf Minimum.
Zugeordnetes Programm PR 01.

Gleichspannungen mit einem digitalen Voltmeter zur Masse gemessen.

RICEVITORE :
In UHF, livello d'entrata 1 mV, monoscopio barre :
- PAL, norma G. bianco 100%.

Via SCART, livello d'entrata 1 Vpp, monoscopio barre :

Colore, Contrasto, Luminosità media, Suono minimo.
Programma selezionato PR 01.

Tensioni continue rilevate rispetto alla massa con un voltmetro digitale.

RECEPTOR :
En UHF, nivel de entrada 1 mV, mira de barras :
- PAL, norma G, blanco 100%.

Por la toma Peritelevision, nivel de entrada 1 Vpp mira de barra.

Color, Contraste, luz a mitad de carrera, Sonido mínimo.
Programa afectado PR 01.

Tensiones continuas marcadas en relacion a la masa con un voltimetro digital.

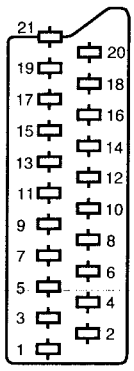

NOTE : (MAIN) *... etc. identifies each* pcb module.

NOTE : (MAIN) *... etc. repères des platines constituant l'appareil.*

HINWEIS : (MAIN) *... usw. Kennzeichnung der Platinen, aus denen das Gerät zusammengesetzt ist.*

NOTA : (MAIN) *... ecc. sigla delle piastre dell' apparecchio.*

NOTA : (MAIN) *... etc. marcas de las placas que constituyen el aparato.*

		ENGLISH	FRANÇAIS	DEUTSCH	ITALIANO	ESPAÑOL
1	⊖	AUDIO "R"	AUDIO "D"	AUDIO "R"	AUDIO "D"	AUDIO "D"
2	⊕	AUDIO "R"	AUDIO "D"	AUDIO "R"	AUDIO "D"	AUDIO "D"
3	⊖	AUDIO "L"	AUDIO "G"	AUDIO "L"	AUDIO "S"	AUDIO "I"
4	⊥	AUDIO	AUDIO	AUDIO	AUDIO	AUDIO
5	⊥	"BLUE"	"BLEU"	"BLAU"	"BLU"	"AZUL"
6	⊕	AUDIO "L" MONO	AUDIO "G" MONO	AUDIO "L" MONO	AUDIO "S" MONO	AUDIO "I" MONO
7	⊕	"BLUE"	"BLEU"	"BLAU"	BLU	AZUL
8	⊕	SLOW SWITCH	COMMUT. LENTE	AV UMSCHALTUNG	"COMMUTAZIONE LENTA"	"CONMUTACION LENTA"
9	⊥	"GREEN"	"VERT"	"GRÜN"	"VERDE"	"VERDE"
10	NC					
11	⊕	"GREEN"	"VERT"	"GRÜN"	"VERDE"	"VERDE"
12	NC					
13	⊥	"RED"	"ROUGE"	"ROT"	"ROSSO"	"ROJA"
14	NC					
15	⊕	"RED"	"ROUGE"	"ROT"	"ROSSO"	"ROJA"
16	⊕	FAST SWITCH	COMMUT. RAPIDE	AUSTASTUNG	"COMMUTAZIONE RAPIDA"	"CONMUTACION RAPIDA"
17	⊥	VIDEO	VIDEO	VIDEO	VIDEO	VIDEO
18	⊥	FAST SWITCH	COMMUT. RAPIDE	AUSTASTUNG	"COMMUTAZIONE RAPIDA"	"CONMUTACION RAPIDA"
19	⊖	VIDEO	VIDEO	VIDEO	VIDEO	VIDEO
20	⊕	VIDEO OR "SYNC"	VIDEO SYNCHRO	VIDEO ODER SYNCHRO	VIDEO O SINCRO	VIDEO O SINCRO
21	⊖	PLUG SCREEN BOX	BLINDAGE PRISE	ABSCHIRMUNG DES STECKERS	INVOLUCRO METALLICO DELLA PRESA	BLINDAJE DEL ENCHUFE

⊕ : INPUT - ENTRÉE - EINGANG - ENTRATA - ENTRADA • ⊖ : OUTPUT - SORTIE - AUSGANG - USCITA - SALIDA • ⊥ : EARTH - MASSE - MASSE - MASSA MASA

INFORMATION - INFORMATIONS - INFORMATIONEN - INFORMAZIONE - INFORMACIONES

CHASSIS DESIGNATION - DESIGNATION DES CHASSIS -BEZEICHNUNG DES CHASSIS - DESCRIZIONE DEI TELAI - DESIGNACIÓN DE LOS CHASIS

(GB) The reference numbers mentioned on the front cover,lists the chassis covered by this technical documentation.
Printed on the chassis back the identification label is the chassis reference number.

(F) Les références indiquées en couverture donnent la liste des chassis traités dans le présent document.
La référence spécifique au récepteur est reportée sur la plaque signalétique arrière du chassis.

(D) Die genaue Chassisbezeichnung befindet sich auf dem Typenschild auf der Rückseite des Chassis

(I) I riferimenti indicati in copertina forniscono la lista dei telai trattati nel presente documento.
La descrizione di un telaio specifico installato sul ricevitore e'indicata sulla targhetta delle caratteristiche situata sulla parte posteriore dell'apparecchio.

(E) Las referencias indicadas en la cubierta dan la lista de los chasis tratados en el presente documento.
La designación de un chasis específico que equipa el receptor se inscribe en la placa del fabricante, situada en la parte trasera del aparato.

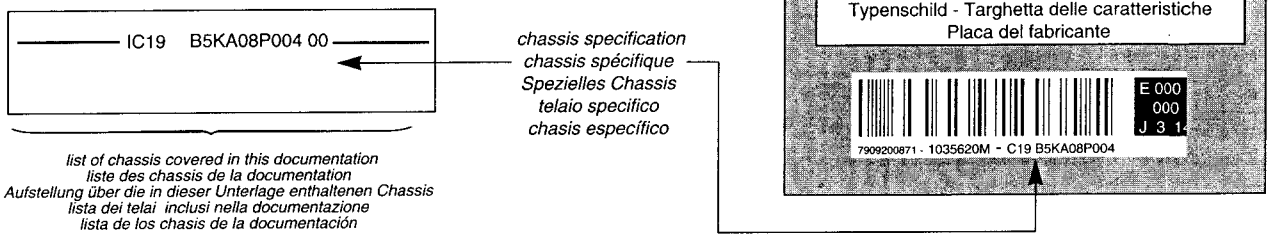

RECEIVER COMPOSITION - COMPOSITION DES RECEPTEURS - BESTÜCKUNG DER EMPFÄNGER - COMPOSIZIONE DEI RICEVITORI - COMPOSICIÓN DE LOS RECEPTORES

Chassis identification table:
1- Main chassis identification code
2- Chassis and module configuration index page number listing.
3- Chassis configurations contained in this documentation

Le tableau ci-dessous regroupe :
1- La désignation des chassis
2- L'environnement électronique de chaque chassis (modules) et le numéro de page où il est décrit.
3- L'association chassis-environnement composant les récepteurs décrits dans la présente documentation.

Die nachfolgendeTabelle beinhaltet:
1 - Die Chassisbezeichnung
2 - Die elektrischen Baugruppen (Module) der Chassis und die Seitenzahl auf der sie abgebildet sind.
3 - Die Chassis und Module der Empfänger aus dieser Dokumentation.

La tabella qui di seguito contiene:
1 - La descrizione dei telai
2 - La configurazione di ogni telaio (moduli) e il numero di pagina nella quale è descritto
3 - L'abbinamento telaio-struttura che compone i ricevitori descritti nella presente documentazione

El cuadro siguiente agrupa:
1 - La designación de los chasis
2 - El entorno electrónico de cada chasis (módulos) y el número de página donde está descrito.
3 - La asociación chasis - entorno que compone los receptores descritos en la presente documentación

RP C19 - 4/3

DESCRIPTION	BLOCK DIAGRAM	WIRING DIAGRAM	FITTING INSTRUCT.	ADJUST-MENTS	PCB MAIN	SCHEMA MAIN	CRT MODULE	SUB RGB ABL	VM MODULE	AUDIO MODULE	DCU MODULE	PIP DVT	SCI MODULE	PS MODULE	HF KB/FCB
IC19 B5KA08P004	5 to 8*	-	13 to 14* 16	15 to 24* 15 to 21	22 to 27	28 to 34	35 to 39	40 41	42 to 46	52 to 56	57 to 64	- 68-69	73 to 75	76 to 79	80* 82 to 83*

RP C19 - 16/9

DESCRIPTION	BLOCK DIAGRAM	WIRING DIAGRAM	FITTING INSTRUCT.	ADJUST-MENTS	PCB MAIN	SCHEMA MAIN	CRT MODULE	SUB RGB ABL	VM MODULE	AUDIO MODULE	DCU MODULE	PIP DVT	SCI MODULE	PS MODULE	HF KB/FCB
IC19 M5MA0BP104	5 to 8	9 to 12	13 to 14* 16	15 to 24* 15 to 21	22 to 27	28 to 34	35 to 39	40 41	47 to 51	80 to 83	57 to 64	65-72	73 to 75	76 to 79	80*/84 85 to 87
IC19 M5MA08P004	5 to 8(**)	13 to 14	13 to 14* 16	15 to 24* 15 to 21	22 to 27	28 to 34	35 to 39	40 41	47 to 51	52 to 56	57 to 64	65-72	73 to 75	76 to 79	80*/84 85 to 87

* Please refer to RP C19 100 Hz 4/3 Service Manual Part N° 350 645 90
* Se référer à la documentation technique de base RP C19 100 Hz 4/3 code : 350 645 90
* Bitte schlagen Sie im RP C19 100 Hz 4/3 Service Manual 350 645 90 nach
* Consultare la documentazione tecnica del telaio RP C19 100 Hz 4/3, codice: 350 645 90
* Referirse a la documentación básica del RP C19 100 Hz 4/3, código : 350 645 90

** Audio : Virtual Dolby Module

BLOCK DIAGRAM - SCHEMA SYNOPTIQUE - BLOCKSCHALTBILD - SCHEMA A BLOCCHI - ESQUEMA DE BLOQUES
RP C19 - DOLBY PRO-LOGIC - PIP

ICC19 - CHASSIS MAIN BOARD

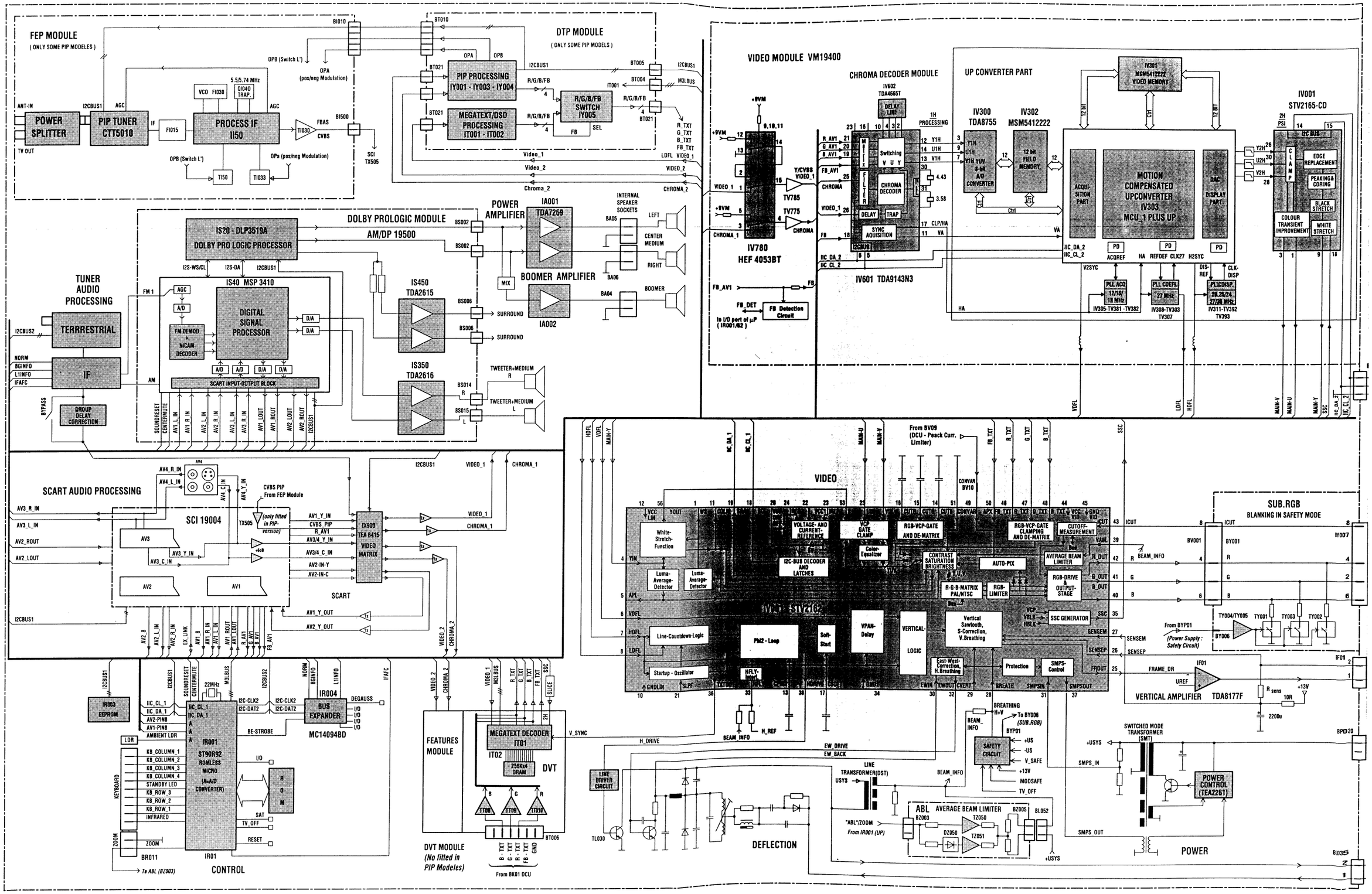

IV001
STV2165-CD

2H PSI
I2C BUS
CLAMP
EDGE REPLACEMENT
PEAKING & CORING
BLACK STRETCH
WHITE STRETCH
COLOUR TRANSIENT IMPROVEMENT
WHITE STRETCH
Y2H
U2H
V2H
MAIN-V
MAIN-U
MAIN-Y
SSC
I²C_DA_2
I²C_CL_2

DIGITAL CONVERGENCE UNIT

HFB
VPSE
H - PULSE SHAPER
MEMORY IK08 / IK15
SCLM
SDAM
PORA to BSVM 0M / OFF (DV09)
UNDER VOLTAGE WATCHDOG TK03/TK04
PWRS
From Power Supply PS (BP 208)
WDG
+5V
GND
+15V
GND
-15V
GND
-47V
+47V
BK04
+12V
-12V
SIGNAL GENERATOR
IK01
STV2040
SYNV
SYNH
SCLS
SDAS
VIDR VIDG VIDB VBLK
DACF
DARH
DARV
DAGH
DAGV
DABH
DABV
IK02 BUFFER VPAR
FILTER VPAR CK06/KK06/CK31
VPARA (to Dyn. Focus)
BUFFER RH IK02
FILTER RH CK45/LK87/CK44
DRH
RH
BUFFER RV IK02
FILTER RV CK55/LK87/CK56
DRV
RV
BUFFER GH IK02
FILTER GH CK46/LK83/CK47
DGH
GH
BUFFER GV IK02
FILTER GV CK58/LK09/CK59
DGV
GV
BUFFER BH IK02
FILTER BH CK48/LK05/CK51
DBH
BUFFER BV IK02
FILTER BV CK61/LK11/CK62
DBV
BV
PIN
KEY
VERTICAL PIN AND KEY PRE - CORRECTION
IP02 - RP ...
VPR1
VPR2
IA10
PRE AMPL. RH
POW. AMPL. RH
PRE AMPL. RV
POW. AMPL. RV
IG11
PRE AMPL. GH
POW. AMPL. GH
PRE AMPL. GV
POW. AMPL. GV
IB12
PRE AMPL. BH
POW. AMPL. BH
PRE AMPL. BV
POW. AMPL. BV
RVE
GVE
BVE
SIGNAL ADDING
+12V -12V
+47V
-47V
+15V
-15V
BR01
RHD
RHR
RVD
RVR
BG01
GHD
GHR
GVD
GVR
BB01
BHD
BHR
BVD
BVR
BK10
BR010
SCL
SDA
GND
BK01
To BT006 DVT
B - TXT
G - TXT
R - TXT
FB - TXT
GND
BUFFER GRID - VIDEO
TK20 - TK22 - TK24 - TK26
G - MAC
GND
R - TXT
G - TXT
B - TXT
GND
SCL
SDA
BK07

3 X CRT : CRT G - CRT B - CRT R
CRT - VIDEO AMPLIFIER
BM*02
USYST
GND
+26V
BM*01
+26V
GND
USYST
BSVM PULSE GENERATION
BSVM POWER OUTPUT
USYST
CURRLIM
BSVM DEFLECTION COIL
HTR
HTRG
HEATER
CONV.
ANODE
CATHODE
G1
G2G3
AQU
BK*11
HTRG
HTR
GND
BSVM
DCR
*BIAG
VIDEO
+12V
+250V
VIDEO DELAY
VIDEO AMPLIFIER
BIAS
CURRENT SENSE
DCR
VIDEO
BM*10
G1
SPOT KILLER AND AUXILIARY COMPONENTS
FOK
G2
BK*05
BLUE GAMMA CORRECTION
R*,G
+250V

SUB.RGB
BLANKING IN SAFETY MODE
BY007
ICUT
R
G
B
TY001
TY003
TY002
BF01
VPR1
VSAW
R sens
10R
2200u
+13V
BP020
BL035
BV05 (DCU)
BV04
BSVM
ICUT
GND
VIDB
GND
VIDR
GND
VIDG
+13V
BP05
VPR1
VSAW
V - PULSE GEN. CV41-RV55 DV17-CV43
VPSE
BLUE GAMMA SAMPLE & HOLD PULSE FORMER TS01-2-3-4
BLUE GAMMA DC - LEVEL TV04 - DV04
PEAK LEVEL CLIPPER TV20 - DV02
VIDB1
BSVM
+13V
*SIGNAL DISTRIBUTING (to BK11 - CRT G / B / R)
BV03 B
BV01 R
BV02 G
HTRG
HTR
GND
BSVM
GND
VID*
+13V
+250V
+ 250V SUPPLY CURRENT WATCHDOG
PEAK CURR. LIMITER DV07/21/28 TV11/14/08/07
BV09
TO MAIN BV10 CONVAR.
DEFLECTION HORIZONTAL
TO H-Pulse Shaper (22/IK01)
HFB
BV12, 13, 14/B
HDEFL1
HDEFL2
BL035 MAIN
BV05
VPR1 (from VERTICAL PIN AND KEY PRE - CORRECTION)
VPR2 (to VERTICAL PIN AND KEY PRE - CORRECTION)
DEFLECTION SPLITTING VERTICAL
VPR2
BV12, 13, 14/A
RP50...RP55
VPR1
BV16
1KV
+5V
+12V
-15V
PWR SUPPLY PRECHARGING
-12V +15V +13V
VPARA (from Filter VPAR)
DYN. FOK. TV10
PORA (from 9/IC01)
BSVM ON / OFF DV00
+1KV GENERATOR RV45 DV18 - DV19
G2R
G2G
G2B
BG06
to G2 (R,G,B) CRT BK05
BV06
+250V
HTR
HTRG
SAFE

POWER SUPPLY CONVERGENCE PS
SECONDARY VOLTAGES
SMT LP250
-47V
BP260
-15V
+15V
+47V
SUPPLY (DCU - BK04)
SMOOTHING CAPACITORS CP206-CP210
RP210... RP213 START-UP
RECTIFIER DP201
BP203
MIS
BP202
BP201
CP201 LP201 CP202
POWER STAGE TP220
DRIVER CIRCUIT DP218 - DP219
FOLDBACK POINT CORRECTION RP240 - DP240
SOFTSTART-CIRCUIT RP243 - DP243
FROSIN-CONTROL DP231 - DP232
TON-MIN-CONTROL RP232 - CP231/CP232
OVERVOLTAGE PROTECTION CIRCUIT DP235 - DP237
SWITCH-OFF CIRCUIT TP222-TP223
SMPS ON/OFF TP230
VOLTAGE REGULATION TP270
+5V
DCU SAFE
SAFETY CIRCUIT TP271
OPTO COUPLER IP250
BP208

WIRING DIAGRAM - SCHEMA D'INTERCONNEXIONS - VERDRAHTUNGSPLAN - DIAGRAMMA DELLE INTERCONNESSIONI - ESQUEMA DE INTERCONEXIONES

RP C19 - 16/9 - DOLBY - PRO LOGIC - PIP

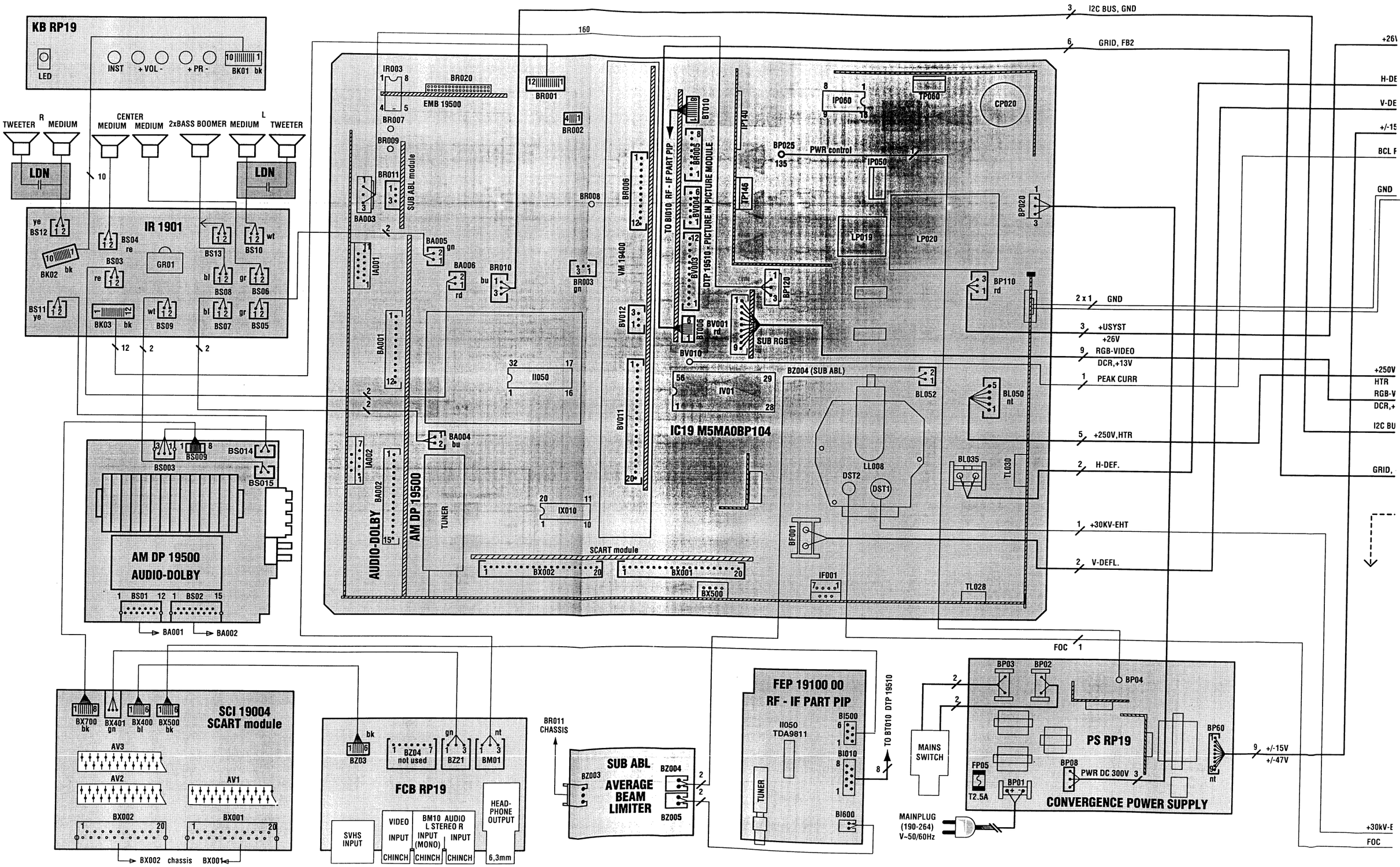

ADJUSTMENTS - REGLAGES - EINSTELLUNGEN - REGOLAZIONE - AJUSTES

U Sys	SERVICE MODE	Standard TV - Settings : ☼ + ◑ + ◑ = 50% TV to AV1 : Black test pattern	V= DP 110	TUBE NAME: RP - 4/3, RP - 16/9 / DESCRIPTION: 4/3 46" - 52", 16/9 46" - 52" / Usys jumper: JP915 / Usys: 134V +/- 0.5V

CONVERGENCE POWER SUPPLY VIDEO-LEVEL ALIGNMENT H - VCO VERTICAL POWER STAGE ZERO	* Please refer to RP C19 100Hz 4/3 Service Manual Part N° 350 645 90 * Se référer à la documentation technique de base RPC19 100Hz 4/3 code : 350 645 90 * Bitte schlagen Sie im RPC19 100 Hz 4/3 Service Manual 350 645 90 nach * Consultare la documentazione tecnica del telaio RPC19 100 Hz 4/3, codice: 350 645 90 * Referirse a la documentación básica del RPC19 100 Hz 4/3, código : 350 645 90

U G2 - DEFLECTION YOKE POSITION - CENTERING MAGNETS

To gain access to the Red, Green and Blue G2 Controls, Deflection Yokes or the Adjustment Magnets, proceed as follows :
- Using a suitable screwdrive push the front panel fixing button in the direction shown (Fig 1).
- Carrefully pull down the front panel and remove it as shown and store safely.

Pour accéder aux réglages de G2 Rouge, Vert et Bleu , aux déviateurs ainsi qu'à leur aimant de réglages, appuyer en vous aidant d'un tournevis sur l'ergot de maintien du coffret de face avant dans le sens de la flèche et rabattre puis déposer le coffret (Fig.1).

Um Zugang zu den G2-Einstellern (Rot, Grün, Blau), Ablenkeinheiten und Abgleichmagneten zu erhalten
- drücken Sie mit einem passenden Schraubendreher den Besfestigungsknopf der Frontabdeckung in die angegebene Richtung (Fig.1).
- ziehen Sie die Frontabdeckung vorsichtig nach unten und entfernen sie wie angegeben.

Per accedere alle funzioni controlli G2 Rosso, Verde e Blu, giogo di deflessione e regolazione magneti, procedere come indicato:
con un apposito cacciavite, premere i tasti di fissaggio del pannello frontale come indicato nella figura (Fig.1).
Piegare il pannello con cura e fissarlo come descritto.

Para tener acceso a los ajustes G2 del Rojo, Verde y Azul, así como a los Yugos de Deflexións y a sus imanes de ajuste, proceder como sigue:
- Utilizando un destornillador adecuado, empujar el botón de fijación del panel frontal en el sentido indicado en la Fig.1.
- Tirar hacia abajo con cuidado del panel frontal y retirarle como se muestra en la figura.

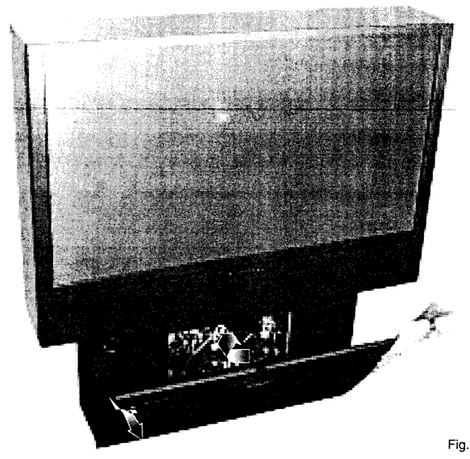

Fig.1

CRT U G2 METHOD 1 Measurment method	G2 potentiometer G2 Red : PV101 G2 Blue : PV201 G2 Green : PV301	Standard TV - Settings : ☼ + ◑ + ◑ = 50% TV to AV1 : Black test pattern	CRT G2 ⊙ pot. Oscillo. video Collector TK103 (radiator) CRT.G,R,B RP 19.00	CRT 1 - Adjust VG2 CRT. R : V= 180V V 2 - Repeat for : CRT G , CRT B.
METHOD 2 Cutoff counter method SERVICE MODE	SERVICE MODE	Standard TV - Settings : ☼ + ◑ + ◑ = 50% No test pattern (generated by internal text processor).	SERVICE MODE Call up VIDEO alignment menu Adjust R-Cut off and G-Cut-off to 80H temporary Select G2 Alignment in Service Mode Adjust the 3 G2 Pot. on 3 CRT Boards for R=28; G=28; B=28 Select "Restore" in Service Mode and press "OK" to restore the cut-off values.	

DEFLECTION YOKE POSITION MAGNETIC CENTERING OF GREEN RED BLUE PICTURE FOCUS DIGITAL CONVERGENCE UNIT	* Please refer to RP C19 100Hz 4/3 Service Manual Part N° 350 645 90 * Se référer à la documentation technique de base RPC19 100Hz 4/3 code : 350 645 90 * Bitte schlagen Sie im RPC19 100 Hz 4/3 Service Manual 350 645 90 nach * Consultare la documentazione tecnica del telaio RPC19 100 Hz 4/3, codice: 350 645 90 * Referirse a la documentación básica del RPC19 100 Hz 4/3, código : 350 645 90
GEOMETRY adjustments	See adjustment in Service Mode (GEOMETRY Menu) Siehe Abgleich im Service Mode (GEOMETRY Menü)
COLOUR adjustments	See adjustment in Service Mode (VIDEO Menu) Siehe Abgleich im Service Mode (VIDEO Menü)
CONVERGENCE KONVERGENZ CONVERGENZA CONVERGENCIA	* Please refer to RP C19 100Hz 4/3 Service Manual Part N° 350 645 90 * Se référer à la documentation technique de base RPC19 100Hz 4/3 code : 350 645 90 * Bitte schlagen Sie im RPC19 100 Hz 4/3 Service Manual 350 645 90 nach * Consultare la documentazione tecnica del telaio RPC19 100 Hz 4/3, codice: 350 645 90 * Referirse a la documentación básica del RPC19 100 Hz 4/3, código : 350 645 90

IF Alignment VCO Standard BG	FI030	Switch set to standard BG IF Signal 38.9 MHz (BG) 30 mV G 75Ω PIP TUNER 11 NH002	V= RI077 AFC 23 II050	Adjust FI30 for 2,5VDC +/-0.1V
TUNER-AGC	PI050	Signal 210.25 MHz 3 mV G 75Ω TV set Antenna input PIP Tuner	11/NH002 IF output Tuner Spectrum Analizer	Adjust PI050 : Maximum level Reduce level with PI50 about 10dB.

GEOMETRIE / CONVERGENCE ADJUSTMENT - GEOMETRIE / REGLAGES DES CONVERGENCES / GEOMETRIE / KONVERGENZ ABGLEICH - GEOMETRIA / REGOLAZIONE CONVERGENZA - GEOMETRIA / AJUSTE DE CONVERGENCIA

* Please refer to RP C19 100Hz 4/3 Service Manual Part N° 350 645 90. For RPC19 16/9 adjust only the 16/9 Mode.
* Se référer à la documentation technique de base RPC19 100Hz 4/3 code : 350 645 90. Pour les RPC19 16/9 seul le mode 16/9 est à régler.
* Bitte schlagen Sie im RPC19 100 Hz 4/3 Service Manual 350 645 90 nach. For RPC19 16/9 adjust only the 16/9 Mode.
* Consultare la documentazione tecnica del telaio RPC19 100 Hz 4/3, codice: 350 645 90. For RPC19 16/9 adjust only the 16/9 Mode.
* Referirse a la documentación básica del RPC19 100 Hz 4/3, código : 350 645 90 . For RPC19 16/9 adjust only the 16/9 Mode.

SCREENS REMOVAL - DEPOSE DES ECRANS - AUSBAU DES BILDSCHIRMES - RIMOZIONE SCHERMI - RETIRADA DE LAS PANTALLAS

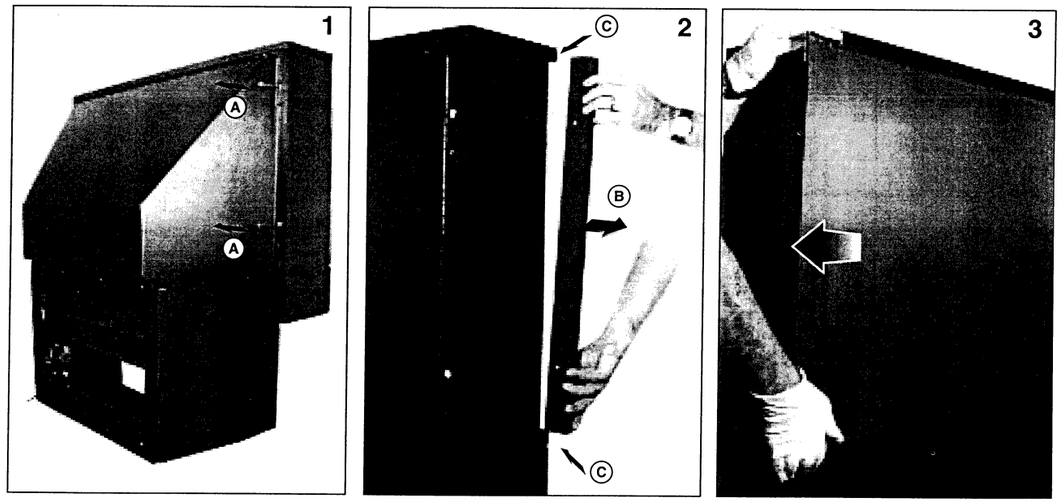

- Remove the two securing screws Ⓐ and the screens retaining rail Ⓑ. Next remove the two securing clamps Ⓒ.
- Remove both screens simultaneously to avoid scratching the plastic screens.

To prevent damage or leaving fingerprints on the screen we suggest the wearing of cotton gloves , these are available under Code **35088640**.
Please Note: Before refitting the new screen, remove the transit covers in order to correctly engage the two screens in the slot.

- Enlever les vis Ⓐ et dégager la règlette de maintien Ⓑ. Retirer les cales Ⓒ.
- Prendre les deux écrans simultanément et les glisser ensemble pour ne pas les rayer. Pour éviter toute empreinte sur l'écran nous suggérons de mettre des gants de coton, disponibles sous le code **35088640.**

Note: Pour le remontage retirer le cache arrière de l'appareil pour repositionner correctement les écrans dans leur rainure.

- Entfernen Sie die beiden Befestigungsschrauben Ⓐ und die Halteschiene Ⓑ. Entfernen Sie dann die Sicherungsklammern Ⓒ.
- Ziehen Sie die beiden Scheiben des Bildschirms, um Kratzer zu vermeiden, zusammen heraus.

Um Beschädigungen und Fingerabdrücke auf dem Bildschirm zu verhindern, tragen Sie möglichst Baumwollhandschuhe. Diese sind unter der Best.-Nr. **35088640** erhältlich.
ACHTUNG: Um die beiden Scheiben des Bildschirms bündig in die Führungsschienen zu bekommen, entfernen Sie vor dem Einbau den Transportschutz vom neuen Bildschirm.

- Rimuovere le due viti di sicurezza Ⓐ e la barra di fissaggio schermo Ⓑ e poi rimuovere i fissaggi di sicurezza Ⓒ.
- Togliere entrambi gli schermi contemporaneamente per evitare di danneggiare gli schermi di plastica.

Per non danneggiare lo schermo o lasciare impronte si consiglia l'uso di guanti di cotone, disponibili con il codice **35088640**.
NB: Rimuovere le guide per riposizionare correttamente lo schermo.

- Retirar los tornillos de seguridad Ⓐ y el listón de sujeción de las pantallas Ⓑ. A continuación retirar las dos fijaciones de seguridad Ⓒ.
- Retirar ambas pantallas simultaneamente para evitar que se arañen.

para evitar daños o huellas dactilares en la pantalla, se sugiere utilizar guantes de algodón (Código **35088640**).
Nota: Antes de colocar la nueva pantalla, retitar los protectores al objecto de acoplar correctamente las dos pantallas en la ranura.

ALIGNMENT PROCEDURE - PROCESSUS DE REGLAGES - ABGLEICH - VISUALIZZAZIONE DEL VALORE DI REGOLAZIONE - PROCEDIMIENTO DE ALINEACION

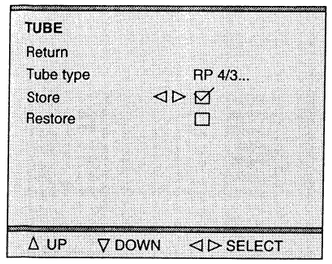

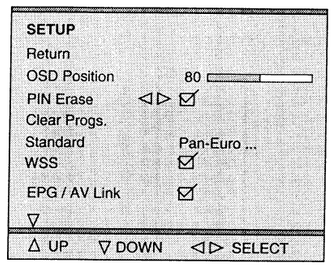

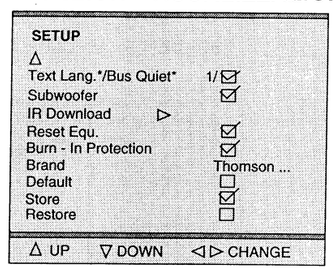

*according to model

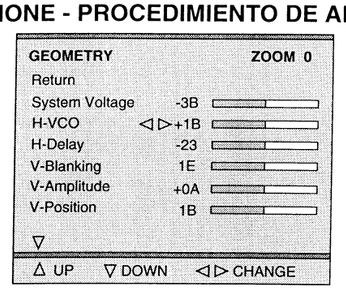

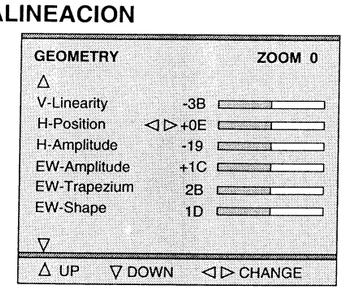

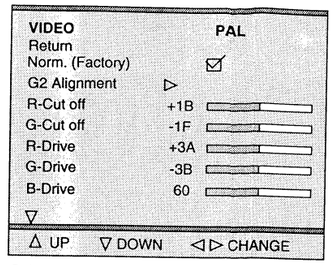

Test Bar pattern used : 4/3 with geometric circle. Adjust separate for 4/3 and 16/9 format. See annexed . Color standard or RGB is autodetected and displayed opposit

TUBE

Return
Closes the sub-menu and returns to the "Main Service Menu"

Retourne au menu principal.

Schließt das Untermenü, und das Servicemodus-Menü erscheint.

Chiude il sottomenu e fa apparire il menu principale Field Service Mode.

Cierra el submenú. El menú Field Service Mode aparece.

Press </> on the RCU or Vol. +/- on projectors front panel.

Tube type

After replacing the NVM, the correct tube type number must be entered .
Once entered, the tubes geometry and video default values are immediately activated.
Variable geometry and video parameters are written to the NVM when the "STORE" line is selected. See below the tube type number list.

Definit le tube exact après changement de NVM.
Les nouvelles valeurs de tubes (avec video et géometrie) sont actives de suite.
Les paramètres de vidéo et de géométrie sont chargés en NVM lorsque STORE est sélectionné. Voir liste ci-dessous.

Nach Tausch des NVM den Bildröhrentyp (6 Ziffern) auswählen. Die neuen Geometrie- und Video-Defaultwerte werden sofort aktiv.
Variable Geometrie- und Videowerte werden durch Speichern mit "STORE" ins NVM geschrieben.
Bildrohrauflistung : siehe unten.

Scegliere il tubo appropriato dopo aver sostituito la NVM; i 6 caratteri che indicano il nuovo tipo di tubo, richiamano i valori video e geometria di default. I parametri per video e geometria vengono caricati nella NVM

Definir el tubo correcto después de haber cambiado el NVM.6 caracteres.Los nuevos valores de tipo de tubo (con el vídeo y la geometría por defecto) se activan inmediatamente. Los parámetros variables de geometría y vídeo se graban en el NVM al seleccionar la función Store. Vea más abajo la lista de tubos.

List :
4/3; 16/9.
- Tube type **RP 4/3 : RP C19 4/3**
- Tube type **RP 16/9 : RP C19 16/9**

➞ After setting ➞ Store (+) ☑

SETUP

Return
Closes the sub-menu and returns to the "Main Service Menu"
Retourne au menu principal.
Schließt das Untermenü, und das Servicemodus-Menü erscheint.
Chiude il sottomenu e fa apparire il menu principale Field Service Mode.
Cierra el submenú. El menú Field Service Mode aparece.
Press </> on the RCU or Vol. +/- on project.front panel

OSD Position
Adjusts the position of all Megatext OSD..

PIN Erase Erases all PINs.
☑ PIN active ☐ No PIN active
Selection : Long press:
Press </>/OK: RCU or Vol. +/- :proj.front panel
Automatically stored.

Clear Prog.
Clears all programms stored in memory and resets all Picture and Sound settings to the factory defaults. The AUTO INSTALL (out of factory) mode can be initialised by a long press (>2.5s.) of the selection button.

Efface tous les programmes mémorisés. valeurs SON et IMAGES: valeurs usines.
Pour sortir des valeurs usine :
Selection : Long press (2,5s) sur la touche de sélection </>.

Löscht alle Programmplätze und setzt alle Bild- und Toneinstellungen auf Fabrikwerte zurück.
Der AUTO-INSTALL-Modus kann durch einen langen Knopfdruck (>2,5s) initialisiert werden.

Clear Prog.
Cancella tutti i programmi in memoria e regola i Valori analogici SUONO IMMAGINE: alivelli di fabbrica. Riportare il TV al modo Selezione: pressione prolungata: 2,5 sec.

Programa de borrado.
Borra todos los programas almacenados en la memoria.Valores analógicos de IMAGEN y SONIDO: valores de fábrica.Regreso a la TV para "salir del modo fábrica".Selección: Presión larga igual a 2,5 s.

Standard "Pan-Euro" or "I".
BG PAL SECAM,L SECAM (France),
DKK' SECAM,NTSC M,I PAL (UK/IRELAND)

WSS
Automatic detection of DOLBY surround sound and 16/9 format pictures via Teletext line number 23 is valid on all programmes.

Détection automatique du son surround DOLBY et du format 16/9 via la ligne 23 du Télétexte. Valide pour tous programmes.

WSS (nur bei 16:9 oder Dolby)
Auswertung der Zeile 23 zur automatischen Format-und Dolbyumschaltung.

Identificazione "auto-surround" e "format" via televideo alla riga 23.La selezione di WSS Processing vale per tutti i programmi.

Detección "auto-surround" y "format" a través de la línea 23 de Teletext.La selección del procesamiento WSS es válida para todos los programas.

☑ Detection enable ☐ Detection disable

EPG / AV Link
Enables or disables the option to decode and display EPG program data.

Validation ou inhibition du décodage/affichage des données du programme EPG.

Zulassen oder Nichtzulassen von EPG.

Abilita o disabilita l'opzione di decodifica e visualizzazione dati programmi EPG.

Valida o inhibe la opción de descodificación y visualización de datos del programa EPG.

☑ Available ☐ Not available

SETUP

Text. Lang. Teletext language :

0	1	2	3
English	Polish	English(US)	English
German	German	German	German
Swedish	Swedish	Swedish	Swedish
Italian	Italian	Italian	Italian
French	French	French	French
Portug.	Serbocroat	Portug.	Portug.
Czech/Slov.	Czech/Slov.	Czech/Slov.	Turkish.
-	Rumanian	English(UK).	-

Bus Quiet

In bus quiet, the NVM can be read, modified and reprogrammed by means of a NVM Programmer.
To access "Bus quiet" : Long press ">".
The TV should remain in "Bus quiet" mode until either Exit, Left, Right, Up,Down or Standby keys on the RCU or local keyboard are pressed; at which point the TV should carry out a warmstart in order to prevent differences between the NVM and RAM contents.
After returning from bus quiet, the software check the NVM content.
If it is not valid, the software perform a new default writing of the NVM content.

En mode bus quiet la NVM peut être lue, modifiée et reprogrammée.
Accès au mode Bus quiet :
Longue pression ">".
Utiliser l'une des touches Exit, Gauche, Droite Haut, Bas, standby ou une des touches du clavier pour sortir le téléviseur du mode bus quiet.
A partir de ce point de sortie le démarrage du téléviseur s'effectue à chaud pour éviter toute différence des contenus RAM et NVM.
En sortie de mode bus quiet, le logiciel contrôle le contenu de la NVM.
S'il n'est pas correct le logiciel exécute une nouvelle écriture par défaut de celle-ci.

Im "Bus Quiet"-Modus kann der Inhalt des NVM mittels eines externen NVM-Programmiergerätes ausgelesen, geändert oder neu programmiert werden. "Bus Quiet" wird einem längeren Druck auf ">" aktiviert.
Das Gerät bleibt solange im "Bus Quiet" - Mode, bis durch Druck auf die EXIT-, LINKS-, RECHTS-, HOCH-, RUNTER- oder STANDBY-Taste (am Gerät oder auf der Fernbedienung) ein Warmstart des Gerätes veranlaßt wird, um unterschiedliche Daten in RAM und NVM zu vermeiden.
Es folgt ein Software-Check des NVM-Inhaltes.
Sollte dieser nicht gültig sein, wird der Inhalt mit Default-Werten überschrieben.

In Modo Bus Quiet, la memoria NVM può essere letta, modificata o riprogrammata.
Per accedere al modo Bus Quiet premere a lungo il tasto ">".
Il TV dovrebbe rimanere in modo Bus Quiet fino a che vengono premuti i tasti Exit, o Destro Sinistro, Su o Giù o Standby dal telecomando o dalla tastiera locale; a questo punto il TV dovrebbe ripartire per evitare interferenze tra i contenuti della memoria NVM e della RAM.
All'uscita dal modo Bus Quiet, il software controlla il contenuto della memoria NVM. Se tale contenuto non è valido, il software provvede a una nuova programmazione della NVM con l'inserimento dei dati di default.

En bus quieto, la NVM puede ser leída, modificada y reprogramada.
Acceso a bus quieto : Larga presión en ">"
El TV permanecerá en bus quieto hasta que se pulse cualquiera de las teclas siguientes: Exit, "<", "Y", "/", ">"o Standby del telemando o del teclado.
En este momento el TV arrancará para evitar cualquier diferencia entre los contenidos de la RAM y NVM.
Al salir del modo bus quieto, el software comprueba el contenido de la NVM.
Si no coincide, el software ejecuta la escritura de los datos en la NVM.

☑ Bus quiet enable ☐ Bus quiet disable

SETUP

Subwoofer
Enable the subwoofer on equiped set.
Validation du Subwoofer sur les appareils équipés .
Einschalten des Subwoofers (wenn vorhanden).
Abilita il subwoofer negli apparecchi eqipaggiati.
Validaciónde que existe el subwoofer.
☑ Subwoofer enable ☐ Subwoofer disable

IR Download
Download screen for receiving mapping via IR data.
Ecran de chargement pour réception "mapping" via IR data
Laden des Programmschemas per AV-Link
Trasferimento IR
Trasferire schermo per ricezione mappatura via dati IR
Descarga de IR
Pantalla de descarga para recibir el mapeado a través de los datos IR.

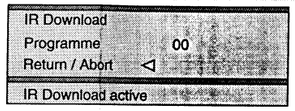

"Programme 00" : function is active or finished.
Return / Abort : To exit/Abort the menu press "left" arrow key or Volume - key of keyboard.
All other IR commands have no response.

"Programme 00" : Fonction active ou finie.
Return / Abort : Pour sortir du menu appuyer sur la touche "gauche" ou "Volume -" du clavier.
Les autres commandes IR sont sans réponse;

"Programme00":Funktion ist aktiv oder beendet
"Return/Abort": Beenden oder Abbruch der Funktion durch Drücken der linken Pfeiltaste oder "Lautstärke-" am Gerät.Alle anderen Tasten haben keine Funktion.

Programma 00: la funzione è attiva o finita.
Return/Abort: per uscire dal menu, premere il tasto "sinistra" del telecomando o il tasto Volume- della tastiera.
Tutti gli altri comandi IR sono senza risposta.

"Programme00" : función activa o terminada.
"Return / Abort" : para salir / abortar, pulsar la tecla "flechaizquierda" o la tecla "volumen -" del teclado.
Todos los demás comandos IR son inoperantes

Reset Equ.	Reset Equaliser Not available Non disponible

Burn-In Protection
- To decrease the risk of marking the screen when displaying static images, the picture is continually displaced over a period of 2 hours by approximately 5 mm.
- Diminue le risque de marquage de l'écran sur image fixe par un déplacement de celle-ci de 5 mm toutes les 2h.et changement de programme.
- Um ein Einbrennen unbewegter Bilder in die Leuchtschicht zu verhindern, wird das Bild nach jedem Programmwechsel und zeitgesteuert alle 2 Stunden um etwa 5mm verschoben.
- Non visualizzare un'immagine fissa per più di due ore, nel caso, cambiare programma.
- Protege la pantalla contra marcas con imagen fija desplazándola 5 mm cada 2 horas y cambiando el programa

☑ Available ☐ Not available

Brand*
Set the "Brand": Thomson, Telefunken, Other
Factory adjusted
Reserve au reglage usine
Reserviert für Fabrikeinstellungen
Riservato alla regolazione di fabbrica
Ajuste reservado fábricas
Press </>: remote control; Vol. +/- : TV keyb.

GEOMETRY

Return
Closes the sub-menu and returns to the "Main Service Menu"
Retourne au menu principal.
Schließt das Untermenü, und das Servicemodus-Menü erscheint.
Chiude il sottomenu e fa apparire il menu principale Field Service Mode.
Cierra el submenú. El menú Field Service Mode aparece.
Press </> on the RCU or Vol. +/- on project.front panel

System Voltage
Adjustment of the main system voltage is only possible via the local keyboard Vol +/- .
- Adjust **Usys = 134V**
(Adjustments p. 16.)

H-VCO Horizontal - VCO Oscillator.
Adjust the value of H-VCO until the speed of the unsynchronised picture becomes stable. (i.e minimum roll).
Agir sur H-VCO pour obtenir une image la plus proche de la synchronisation
H_VCO auf Schwebung abgleichen.
Regolare l'H_VCO finché l'immagine non sincronizzata non avrà raggiunto la velocità minima.
Ajuste H_VCO hasta que la imagen no sincronizada alcance su velocidad más baja.
default value = 0FH
Press </>: remote control; Vol. +/- : RP keyb.

H-Delay		Horizontal delay Use "+" and "-" to adapt the image

V-Blanking
1-Adjust V-amp. for a 107% over scanned picture.
2-Reduce V-blanking for visible lines top and bottom of screen.
3-Increase step by stepV-blank. until at the bottom and the cut- off lines on the top of the screen disappear.
4-Increase one more step
5-Fine adjust V-amp. and V-position

1-V-amp. amplitude verticale suffisante (>7% overscan)
2-Réduire V-blanking:visible en haut et bas.
3-Agir étape par étape jusqu'à disparition du blanking en bas d'image et des lignes de cut-off en haut d'écran
4-Augmenter d'une valeur.
5-Faire un réglage fin de V-amp. et V-position

1- Voreinstellung der V-amp auf: >7% Überschreibung.
2- Reduzieren Sie V-Blanking soweit bis die ersten geschriebenen Zeilen am oberen Bildrand sichtbar werden.
3- Erhöhen Sie V-Blanking Schritt für Schritt bis die Cut-Off Meßzeilen gerade am oberen Bildrand verschwinden.
4- Erhöhen Sie V-Blanking um eine Stufe.
5- Feineinstellung von V-Amp und V-Position.

1- Ampiezza verticale: grande a sufficiensa (7% di sovrascanzioni)
2- Riduzze il V-blanking per visualizzare le linee : alto e in basso dello schermo.
3- Aumentare passo/passo: finche'le linee di cut off nella parte alta dello schermo scompaiono.
4- Aumentare ancora di un passo
5- Regolare con precisione l'ampiezza e la posizione verticali.

1- Amplitud V: suficientemente grande (7% de sobreexploración)
2- Reducir el borrado V: visible en las partes superior e inferior.
3- Aumentar el paso a paso: el borrado en la parte inferior y las líneas de cut-off en la parte superior desaparecen.
4- Aumentar de otro paso.
5- Ajustar finamente la amplitud V y la posición V.

V-Amplitude		*Interlace (p. 20)*
V-Position	Vertical Power Stage zero adjust. *(Adjustments : refer to RPC19 Service Manual Part : 350 645 90)*	

GEOMETRY

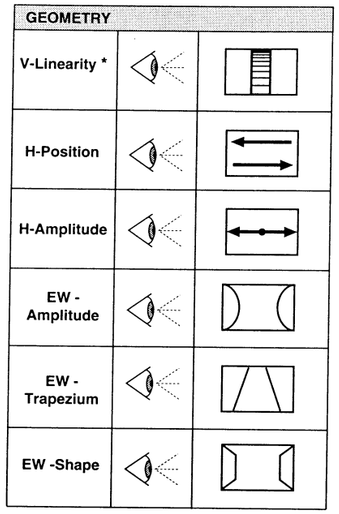

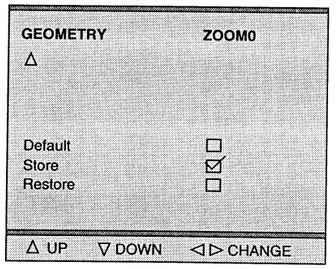

page 3

➞ After setting ➞ Store (+) ☑

Default Values :

- U Sys.	: 98	- V-Linearity *	: 60
- H-VCO	: 80	- H-Position	: 78
- H-Delay	: 80	- H-Amplitude	: 78
- V-Blanking	: A0	- EW-Amplitude	: 8C
- V-Amplitude	: 4E	- EW-Trapezium	: 78
- V-Position	: 80	- EW-Shape	: 00

* - V-Linearity : 60= Fix value. Not to change.

VIDEO PAL

Return
Closes the sub-menu and returns to the "Main Service Menu"
Retourne au menu principal.
Schließt das Untermenü, und das Servicemodus-Menü erscheint.
Chiude il sottomenu e fa apparire il menu principale Field Service Mode.
Cierra el submenú. El menú Field Service Mode aparece.
Press </> on the RCU or Vol. +/- on project.front panel

Norm. (Factory)

Recalls the factory settings for colour, brightness, contrast and sharpness and sets contrast expand to "low".

☑ Factory settings recalled
☐ User settings kept.

G2 Alignment

Display a special menu:

Adjust R-Cut off and G-Cut off to 80H temporary.

RGB cutoff counters

Adjust the values with the 3 potentiometer on CRT boards to: R=28 G=28 B=28

To return video submenu:
Press </>/OK: remote control;Vol. +/- :RP keyb.
Select"Restore" to restore the cut off values.

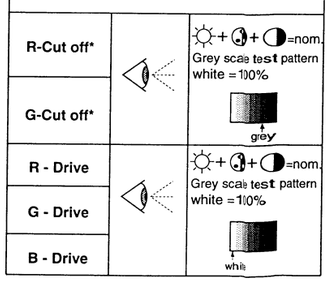

Note :
* adjust separate for PAL/NTSC/SECAN and RGB/AV

➞ After setting ➞ Store (+) ☑

Default Values :

- R-Cut off	: 70	- B-Drive	: 64
- G-Cut off	: B8	- Scale bright.	: 90
- R-Drive	: 54	- Scale colour	: 94
- G-Drive	: 94	- Scale contrast	: BC

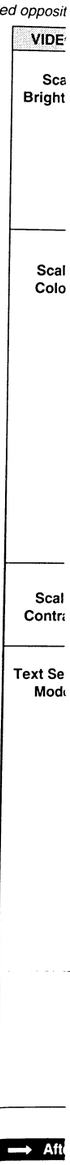

IMPORTANT

Factory setting values are indicated on a label inside the optical block housing. These should be used in preference to the default values.

Les valeurs de réglages usines sont indiquées sur une étiquette située à l'intérieur du caisson bloc-optique.Elles sont à utiliser de préférences aux valeurs par défaut

Die Fabrik-Einstellwerte sind auf einem Aufkleber im Inneren des Gehäuses des Optischen Blocks angebracht.
Diese sollten den Defaultwerten vorgezogen werden.

I valori di regolazione di fabbrica vengo all'interno del contenitore del blocco ott Questi valori devono essere utilizzati di

Los valores de los ajustes de fábrica se interior de la cubierta del bloque óptico. valores por defecto

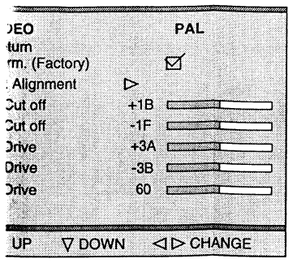

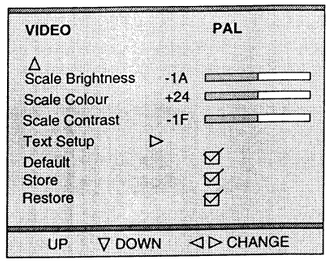

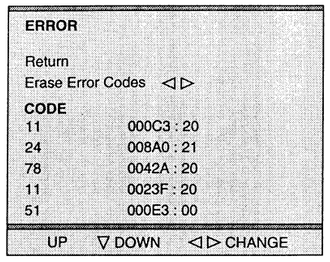

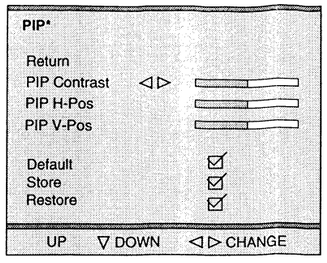

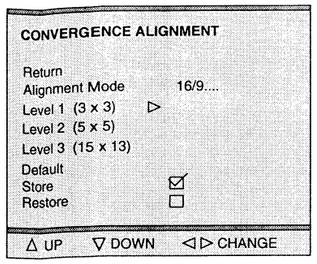

standard or RGB is autodetected and displayed opposite the displayed opposite the menu title.

• *only PIP models*

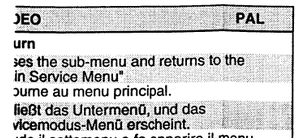

rm. (Factory)

alls the factory settings for colour,
ntness, contrast and sharpness and sets
rast expand to "low".

Factory settings recalled
User settings kept.

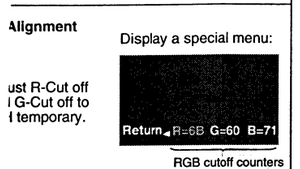

ust the values with the 3 potentiometer
CRT boards to: R=28 G=28 B=28

eturn video submenu:
s </>/OK: remote control;Vol. +/- :RP keyb.
ct"Restore" to restore the cut off values.

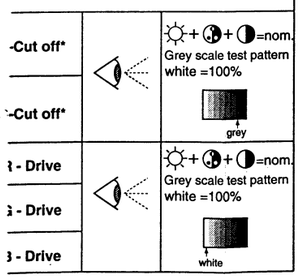

te :
ust separate for PAL/NTSC/SECAM and RGB/AV

After setting → Store (+)

ault Values :

-Cut off : 70	- B-Drive : 64
-Cut off : B8	- Scale bright. : 90
-Drive : 54	- Scale colour : 94
-Drive : 94	- Scale contrast : BC

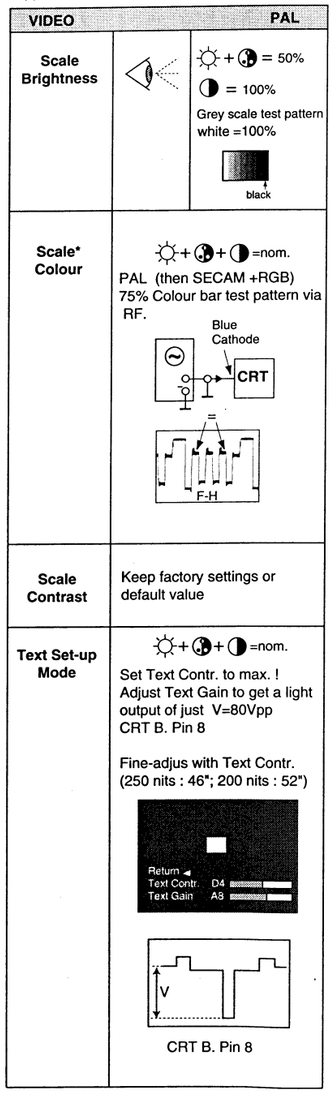

After setting → Store (+)

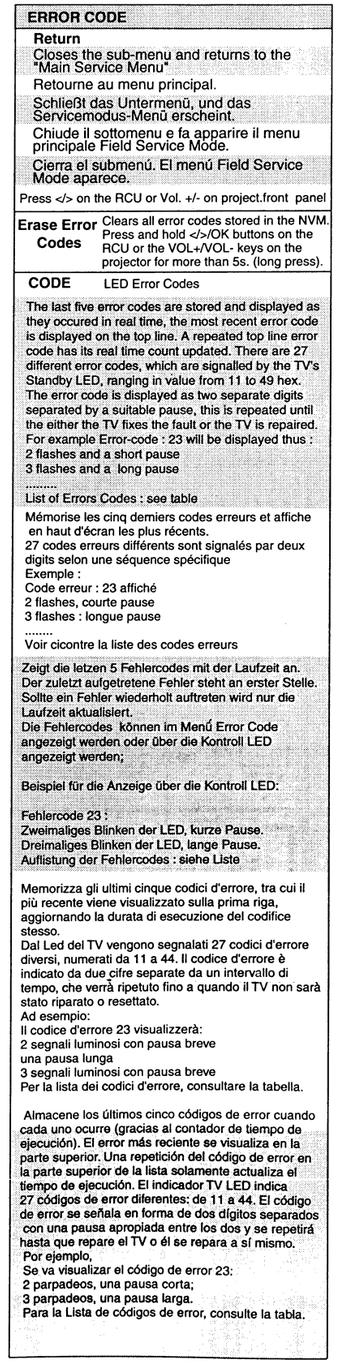

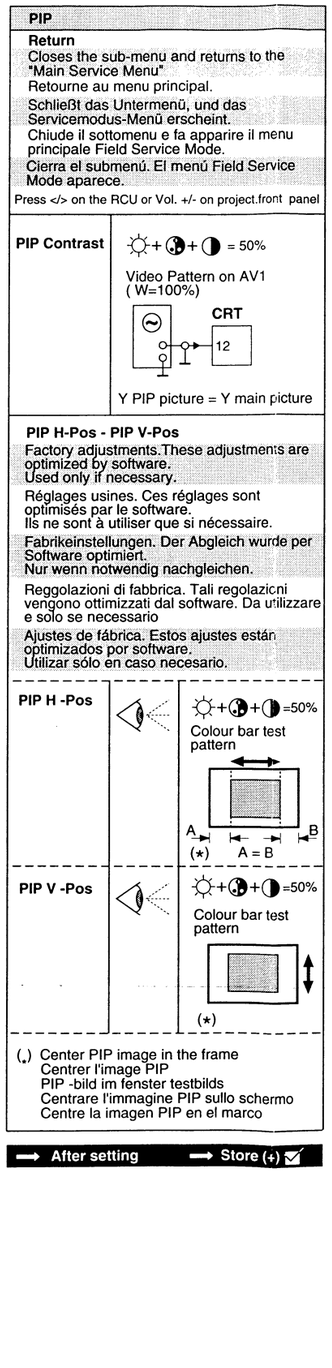

After setting → Store (+)

cal block housing.	I valori di regolazione di fabbrica vengono indicati su una etichetta collocata all'interno del contenitore del blocco ottico. Questi valori devono essere utilizzati di preferenza ai valori di default.
ette située à l'intérieur ux valeurs par défaut des Gehäuses des	Los valores de los ajustes de fábrica se indican en una etiqueta situada en el interior de la cubierta del bloque óptico. Son de utilización preferente a los valores por defecto

GEOMETRY MODE ALIGNMENT

4/3 picture tube

Signal : 4/3 test pattern

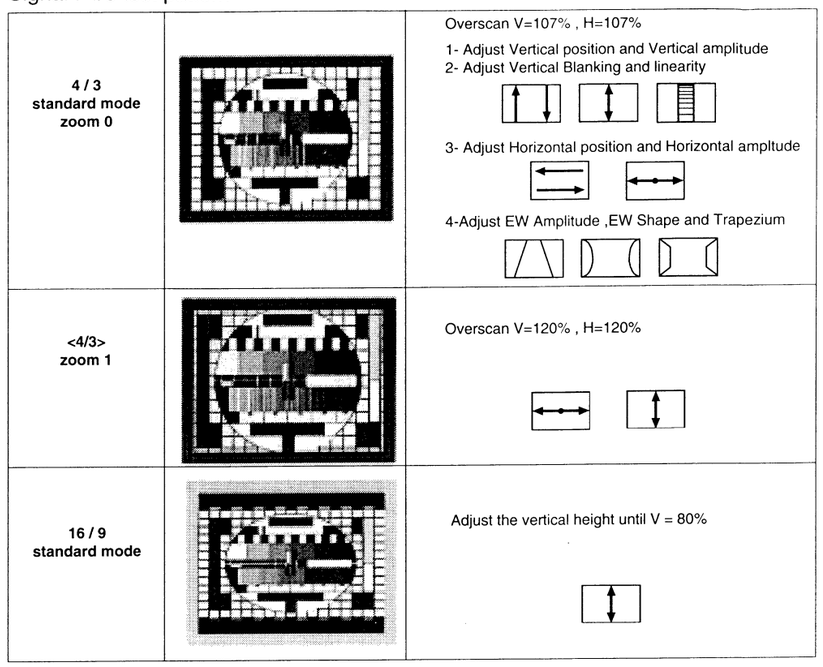

16/9 picture tube

Signal : 4/3 test pattern

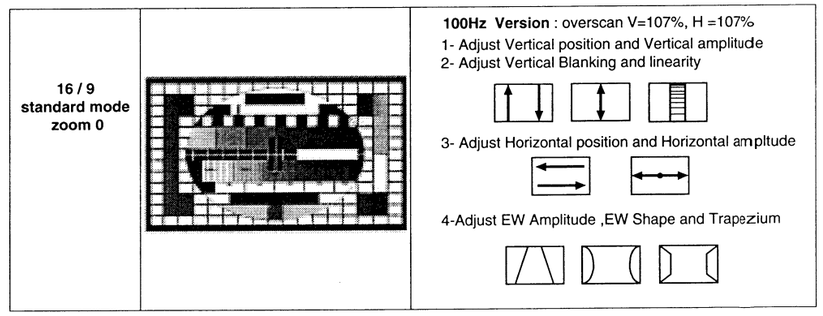

Note : GEOMETRY : V-Amplitude

Vertical Interlace - Entrelacement Vertical - Vertikal Interlace
Interlaccio Verticale - Entrelazado vertical

- Check the vertical Interlace*.
- Contrôler l'entrelacement vertical*.
- Überprüfen Sie das vertikale Interlacing ("Verschachtelung") der Zeilen*.
- Controllare l'interlaccio verticale*.
- Compruebe El entralazado vertical*.

Good : Interlaced *Wrong : Paired*

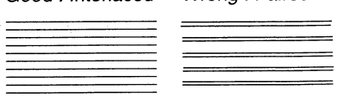

If the interlace is poor, adjust the **VAMP.** by 1/2 steps (+ or -) to achieve the best interlace.

Si l'entrelacement n'est pas correct agir sur **V AMP** de une ou deux valeurs pour obtenir un entrelacement correct.

Bei einer Paarigkeit der Zeilen verstellen Sie **V AMP** um 1 oder 2 Stufen (+ oder -)

Si el entrelazado no es bueno, mueva **VAMP** en 1 o 2 pasos (+ o -) para conseguir la mejor.

Se l'interlaccio non e' idoneo, correggere **VAMP** di 1 o 2 fasi (+/-) per ottenere l'interlaccio migliore.

* To check in 4:3 and in 16:9 - Contrôler en 4:3 et 16:9 - Kontrollieren Sie im 4:3 und im 16:9 Format .- Controllare nel formato 4:3 e 16:9. - Revisar en 4:3 y 16:9

ERROR CODES

GB

11 1st Audio_MSP doesn't answer
12 2nd Audio-MSP doesn't answer
13 Audio-DSP doesn't answer
14 Video IC STV2161/2 doesn't answer
15 Chroma IC 2151/9143 doesn't answer
16 Upconverter DMU0 doesn't answer
17 Audio (or Dolby) module not detected
18 SCART IC TEA6415C doesn't answer
19 Tuner CTT5000 doesn't answer
21 I2C Bus1 data line held low
22 I2C Bus2 data line held low
23 I2C Bus1 clock line held low
24 I2C Bus2 clock line held low
25 Switched 5V not available
26 Tube doesn't get warm in time
27 Deflection detects >3 times protection (problem detected on "breathing" line)
29 DRAM memory of Megatext defect
31 RAM is full
32 A software-timer has been requested, but is not available yet
33 The PSI chip (STV2165) doesn't answer
34 The NVM (X24C32) chip doesnt answer
35 13V not available
36 Wrong addr. NVRAM passed to the bus-handler
37 Unexpected level on NMI (Interrupt) line found (possible cause : tube flashover)
38 M3LBus for Megatext is blocked
39 Megatext (SDA5273) doesn't answer
41 Bus1 Data Line not recoverable
42 bus2 Data Line not recoverable
43 MCU (Motion Mastering Up-Converter) doesn't answer
44 Convergence IC (STV2040) doesn't answer
45 Defect "Video Module" is detected
46 "Default" NVRAM of DCU doesn't answer
47 Test Pattern chip of DCU defect
48 Test Pattern NVRAM convergence chip defect
49 Convergence module doesn't answer anymore
51 PIP Module doesn't answer.
52 The Teletext module is not conform .

F

11 Processeur Audio MSP ne répond plus
12 Deuxième MSP ne répond plus (Dolby)
13 Audio-DSP ne répond plus (produit Dolby)
14 Video-IC STV2161 ou 2162 ne répond plus
15 Chroma-IC STV2151 ou TDA9143 ne répond plus
16 Convertisseur de frequence d'image digital DMU0 (Intelligent Mastering) ne répond plus
17 Module son (ou Dolby) n'est pas détecté
18 Commutateur SCART TEA6415C ne répond plus
19 Tuner CTT5000 ne répond plus
21 I2C-bus 1 data bloqué au niveau bas
22 I2C-bus 2 data bloqué au niveau bas
23 I2C-bus 1 clock bloqué au niveau bas
24 I2C-bus 2 clock bloqué au niveau bas
25 Le "5V commuté" n'est pas disponible
26 Tube ne chauffe pas a temps
27 Protection base de temps active plus de trois fois (problème détecté sur la ligne "breathing")
29 Mémoire (DRAM) du Megatext est en panne
31 Plus de place en RAM
32 Requète logiciel-timer demandée mais pas encore disponible
33 STV 2165 (PSI 100Hz) ne répond plus
34 NVM (mémoire) X24C32 ne répond plus
35 +13V n'est pas disponible
36 Adresse NVRAM inconnue
37 Problème détecté sur la ligne "Interrupt" pendant le démarrage ou le fonctionnement duTV. Possibilité: "arking"?
38 Bus M3L pour Megatext est bloqué
39 Megatext (SDA5273) ne répond plus
41 I2C-bus 1 data reste blocqué
42 I2C-bus 2 data reste blocqué
43 MCU (convertisseur de frequence d'image digital: Motion Mastering) ne répond plus
44 Le CI Convergence (STV2040) ne répond plus
45 "Vidéo Module" erroné détecté
46 La NVRAM "Default" de la platine de convergence ne répond plus
47 Test Pattern du CI de Convergence erroné
48 Test Pattern des NVRAM de Convergence erroné
49 La platine de Convergence ne répond plus.
51 Le module PIP ne répond plus.
52 Le Module Text (DVT) n'est pas le bon.

D

11 Audio MSP Prozessor antwortet nicht.
12 Zweiter Audio MSP Prozessor antwortet nicht.(Dolby)
13 Audio DSP Prozessor antwortet nicht. (Dolby)
14 IC STV2161/62 antwortet nicht
15 IC STV2151 / TDA9143 antwortet nicht
16 DMU0 Upconverter (Videomodul) antwortet nicht
17 Audio- oder Dolby-Modul nicht erkannt
18 TEA6415C antwortet nicht (SCART-Schalter)
19 Tuner CTT5000 antwortet nicht
21 I2C Bus1 data line ist auf low
22 I2C Bus2 data line ist auf low
23 I2C Bus1 clock line ist auf low
24 I2C Bus2 clock line ist auf low
25 Geschaltete 5V nicht vorhanden
26 Röhre wird nicht rechtzeitig warm
27 Ablenkung meldet 3 mal Fehler. (Problem auf Breathing Leitung)
29 DRAM des Megatext defekt
31 RAM antwortet nicht
32 Ein software-timer wurde angefordert, ist aber noch nicht bereit
33 STV 2165 (PSI 100Hz) antwortet nicht
34 NVM Chip antwortet nicht (X24C32)
35 +13V nicht vorhanden
36 NVM adresse nicht gefunden
37 Unerwarteter Zustand an NMI (Interrupt) line gefunden. (Mögliche Ursache = Röhren-Überschlag")
38 M3L Bus des Megatext blockiert
39 Megatext (SDA 5273) antwortet nicht
41 Bus1 (data line) nicht möglich zu reaktivieren
42 Bus2 (data line) nicht möglich zu reaktivieren
43 MCU (Motion Mastering Up-Converter) antwortet nicht
44 Konvergenz IC (STV2040) antwortet
45 falsches Videomodul (falscher MCU)
46 NVRAM für Konvergenz antwortet nicht
47 Bildmuster im Konvergenz-IC ist defekt
48 Bildmuster aus dem NVRAM ist defekt
49 Bildrohrtyp "R" ist eigestellt, aber kein Konvergenz-IC gefunden
51 PIP antwortet nicht
52 Falsches Videotextmodul.

I

11 Il primo IC Audio MSP non risponde
12 Il secondo IC Audio MSP non risponde
13 L'integrato Audio DSP non risponde
14 L' IC 2161/2 non risponde
15 L'IC 2151/9143 non risponde
16 Il convertitore non risponde
17 Il Modulo Audio non viene identificato
18 Il TEA6415C non risponde
19 Il sintonizzatore non risponde
21 Linea data I2C bus 1 forzata bassa
22 Linea data I2C bus 2 forzata bassa
23 Linea clock I2C bus 1 forzata bassa
24 Linea clock I2C bus 2 forzata bassa
25 La tensione 5V commutati non disponibile
26 Il tubo non raggiunge la corretta temperatura nel tempo stabilito
27 Per 3 volte, la deflessione ha rilevato una protezione (problema riscontrato dalle linee "breathing")
29 Difetto alla DRAM di Megatext
31 La RAM è satura
32 E' stato richiesto un software-timer, ma non é ancora disponible
33 Il chip PSI non risponde
34 Il chip NVM non risponde
35 13V non disponibile
36 E' stato trasmesso al bus un indirizzo errato della NVRAM
37 Livello imprevisto sulla linea NMI
38 Bus M3L per Megatext bloccato
39 Megatext non risponde
41 Bus 1 (linea dati) non ripristinabile
42 Bus 2 (linea dati) non ripristinabile
43 MCU non risponde
44 Convergenza IC (STV2040) non risponde
45 rivelato Modulo Video difettoso
46 "Default" NVRAM di DCU non risponde
47 Integrato generatore di test DCU difettoso
48 Integrato generatore di test NVRAM difettoso
49 Il modulo convergenza non risponde
51 Il Modulo PIP non viene identificato
52 Il modulo Televideo non è conforme

E

11 Procesador de audio MSP no responde
12 Segundo MSP no responde (Dolby)
13 Audio DSP no responde
14 Cir. integrado de video STV2161 ó 2162 no responde
15 Cir. integrado croma ST2151 ó TDA9143 no responde
16 Convertidor de frecuencia de imagen digital DMU0 (Mastering Inteligente) no responde
17 Módulo de sonido (o Dolby) no se detecta
18 Conmutador Scart (TEA6415C) no responde
19 Tuner CTT5000 no responde
21 Data 1 del bus I2C permanece en bajo
22 Data 2 del bus I2C permanece en bajo
23 Clock 1 del bus I2C permanece en bajo
24 Clock 2 del bus I2C permanece en bajo
25 No se dispone de los "5v conmutados"
26 El tubo tarda en calentarse
27 La protección de la deflexión actúa mas de 3 veces (el problema se detecta en la línea de "breathing")
29 La memoria DRAM del Megatext está defectuosa
31 RAM está llena
32 Un timer-software ha sido solicitado, pero no está disponible
33 El chip STV2161 (PSI 100Hz) no responde
34 La memoria no volátil X24C32 no responde
35 No están disponibles los + 13 v.
36 Dirección de la NVRAM incorrecta
37 Problema detectado en la línea "Interrupt" durante el arranque o el funcionamiento del TV.Posibilidad de chispazos en muy alta?
38 El bus M3L para el Megatext está bloqueado
39 Megatext (SDA5273) no responde
41 Data 1 del bus I2C permanece boqueado
42 Data 2 del bus I2C permanece bloqueado
43 MCU (convertidor de frecuencia de imagen digital: Motion Mastering) no responde
44 Cir. integrado de covergencia (STV2040) no responde
45 Fallo detectado en el módulo de Video
46 Fallo en NVRAM o DCU no responde
47 Fallo en c.i. de mira o DCU
48 Fallo en c.i. NVRAM de convergencias
49 El módulo de convergencias no responde
51 El módulo PIP no responde
52 El módulo Teletexto no es conforme

MAIN BOARD - PLATINE PRINCIPALE - CHASSIS GRUNDPLATTE - PIASTRA PRINCIPALE - PLATINA PR

COMPONENT SIDE - COTE COMPOSANTS - BESTÜCKUNGSSEITE - LATO COMPONENTI - LADO COMPONENTES

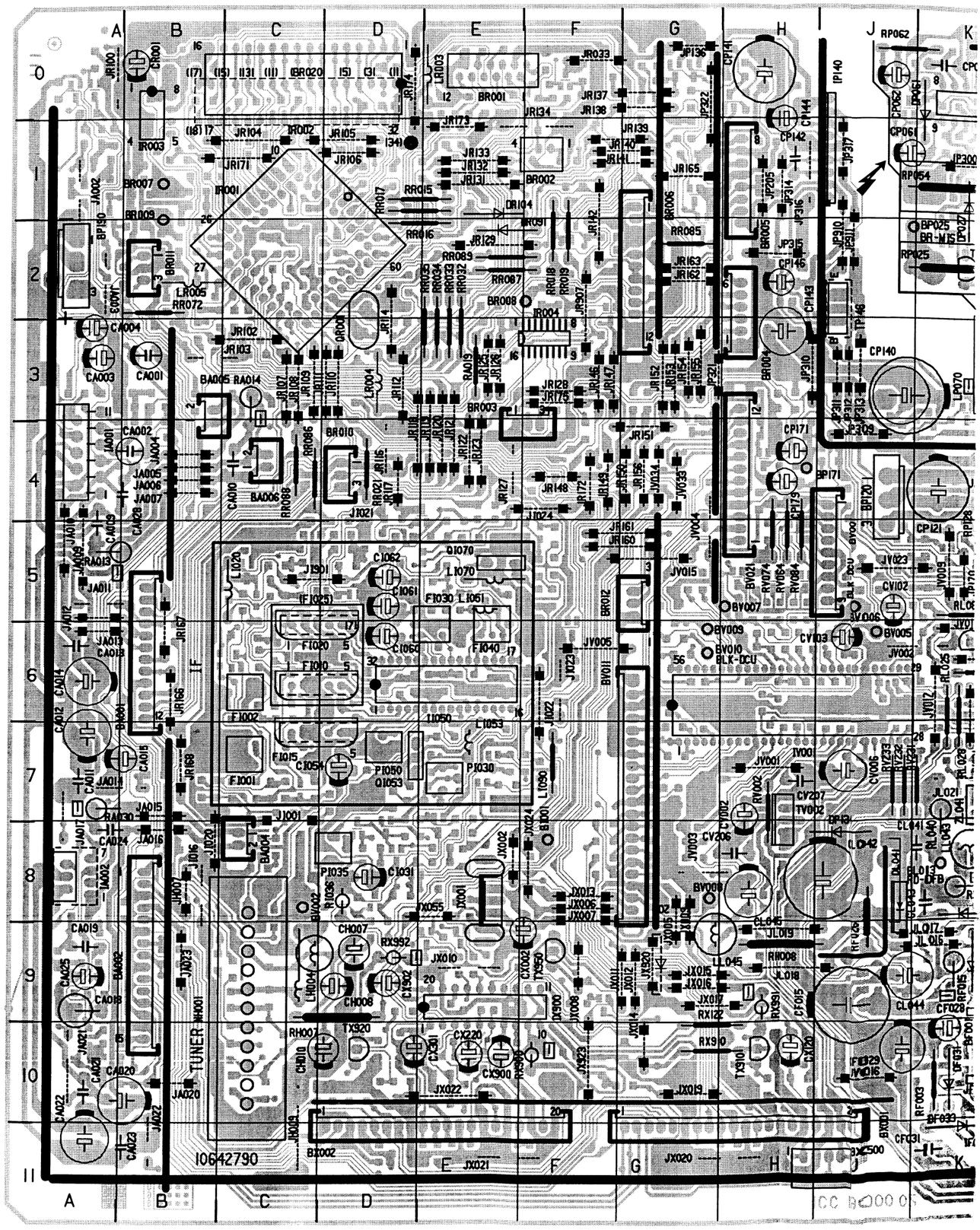

A PRINCIPALE - PLATINA PRINCIPAL

- LADO COMPONENTES

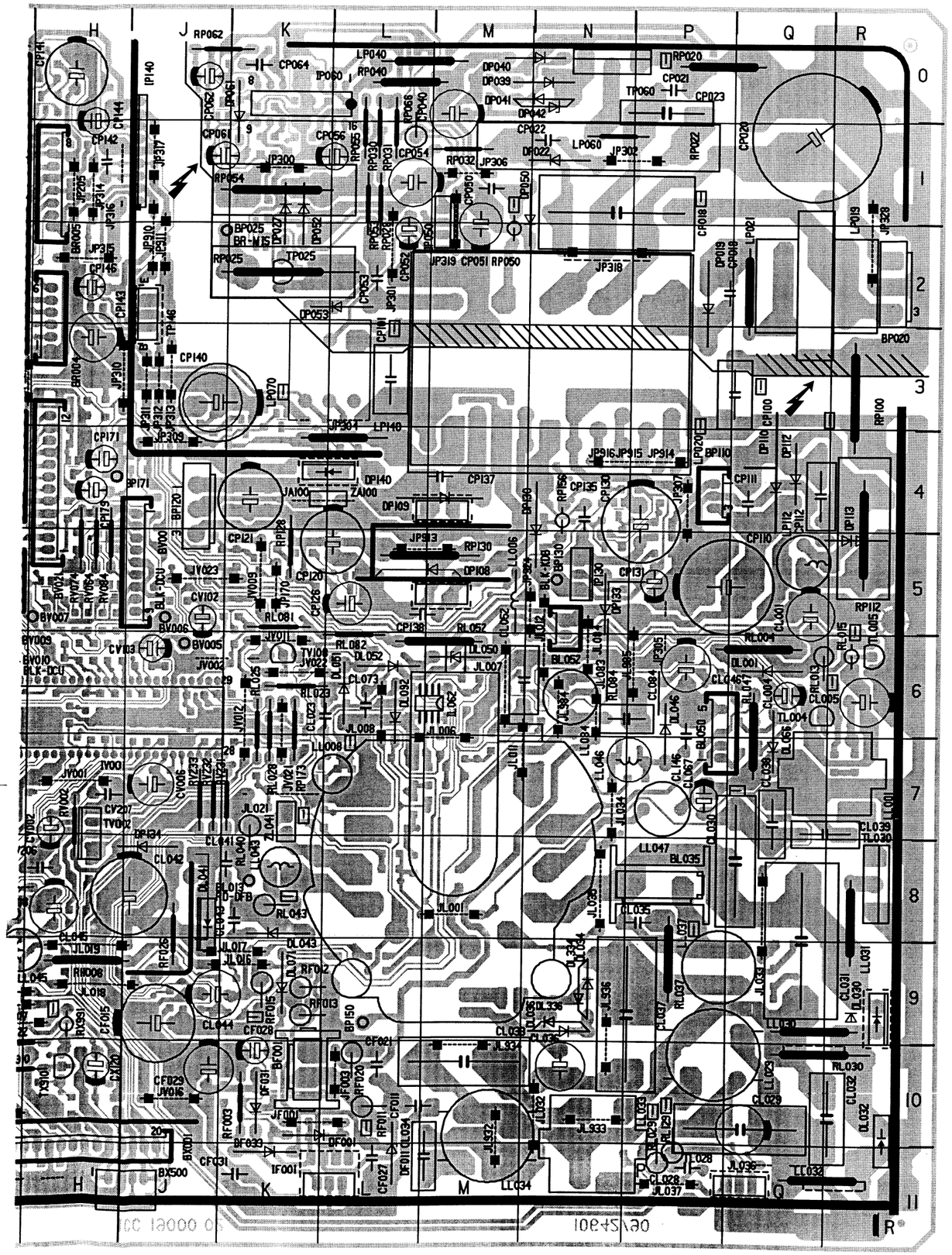

COMPONENTS LOCATION - LOCALISATION DES ELEMENTS - LAGE DER BAUTEILE - LOCALIZZAZIONE DEGLI ELEMENTI - LOCALIZACION DE LOS COMPONENTES

* SOLDER SIDE - COTE CUIVRE - LÖTSEITE - LATO SALDATURE - LADO DEL COBRE

1	2	3

BA001		B6
BA005		B3
BF001		K10
BI001		F8
BL013		K8
BL035		P8
BL052		N5
BP025		J2
BP110		P4
BP130		N5
BP150		L9
BP171	*	H4
BP190		A2
BR001		E0
BR002		F1
BR003		F4
BR004		H2
BR005		H1
BR006		G2
BR007		B1
BR008		F2
BR009		B2
BR010		D4
BR011		B2
BR012		G5
BV001		J5
BV002		C8
BV005		J6
BV006		J5
BV007	*	H5
BV008		G8
BV009		G6
BV010		G6
BV011		G7
BV021		H4
BX001		H11
BX002		E11
BX500		J11

CA001		B3
CA002		B4
CA003		A3
CA004		A3
CA005	*	B3
CA006	*	B3
CA007	*	C3
CA008	*	C4
CA009		A5
CA010		C4
CA011		A7
CA012		A7
CA013		A6
CA014		A6
CA015		B7
CA016	*	B7
CA018		A9
CA019		A9
CA020		B10
CA021		A10
CA022		A11
CA023		B11
CA024		A8
CA025		A9
CA027	*	C8
CA028		B4
CF002	*	K10
CF011		L10
CF015		J9
CF021		L10
CF027		L11
CF028		K10
CF029		J10
CF031		K11
CH001	*	C10
CH002	*	C10
CH003	*	C10
CH004	*	C9
CH005	*	C9
CH006	*	C9
CH007		D9
CH008		D9
CH009	*	B9
CH010		D10
CI001	*	C8
CI002	*	B7
CI003	*	C7
CI004	*	C7
CI005	*	C7
CI006	*	C8
CI007	*	B6
CI008	*	C5
CI009	*	C6
CI010	*	C7
CI011	*	C7
CI012	*	C6
CI020	*	C5
CI021	*	C6
CI022	*	F6
CI025	*	D7
CI030	*	D8
CI031	*	D8
CI032	*	E5
CI033	*	F4
CI040	*	C6
CI041	*	C6
CI045	*	D5
CI046	*	E6
CI048	*	D6
CI049	*	D6
CI050	*	D6
CI051	*	D6
CI052	*	D6
CI053	*	E6
CI054		D7
CI055	*	D7
CI056	*	D7
CI060		D6
CI061		D5
CI062		D5
CI063	*	D6
CI064	*	E5
CI065	*	E5
CI066	*	E5
CI070	*	F6
CI071	*	C5
CI072	*	B6
CI073	*	E5
CI074	*	F5
CI077	*	E6
CI078	*	E4
CI090	*	F7
CL001		Q5
CL002	*	K5
CL003	*	Q6
CL004		Q6
CL005		R6
CL006	*	Q5
CL008	*	R5
CL023		L6
CL027	*	J6
CL028		P11
CL029		Q10
CL029		Q10
CL030		Q8
CL031		Q8
CL032		R10
CL033		M10
CL034		M11
CL035		P8
CL036		N10
CL037		P9
CL038		Q7
CL039		R7
CL041		K8
CL042		J8
CL043		K8
CL044		J9
CL045		H8
CL046		P6
CL052		M6
CL057	*	L7
CL061	*	M6
CL062	*	L7
CL063	*	M7
CL066	*	Q6
CL067		P7
CL073		L6
CL084		P6
CL146		P6
CL211	*	L8
CP018		N1
CP019		P2
CP020		Q1
CP021		P0
CP022		N1
CP023		P0
CP040		M0
CP041	*	N0
CP042	*	N0
CP050		M1
CP051		M2
CP052		L2
CP053		L2
CP054		L1
CP055	*	L1
CP056		L1
CP060	*	K1
CP061		J1
CP062		J0
CP063	*	J0
CP064		K0
CP065	*	L0
CP067	*	L0
CP068	*	K0
CP071	*	K0
CP100		P3
CP100		Q3
CP101		L3
CP102	*	M3
CP110		P5
CP111		Q4
CP112		Q4
CP120		L5
CP121		K4
CP126		L5
CP130		P4
CP131		P5
CP135		N4
CP136	*	J3
CP137		M4
CP138		L5
CP140		J3
CP141		H0
CP142		H1
CP143		H3
CP144		H1
CP146		H2
CP150	*	H2
CP151	*	N4
CP152	*	N4
CP168	*	G1
CP170	*	K6
CP171		H4
CP176	*	H4
CP179		H4
CR001		B0
CR002	*	A0
CR003	*	C2
CR004	*	C2
CR005	*	B0
CR006	*	B0
CR007	*	D0
CR008	*	D1
CR009	*	D2
CR010	*	D2
CR011	*	D2
CR015	*	D1
CR016	*	E1
CR017	*	E1
CR018	*	F2
CR019	*	F2
CR020	*	E4
CR021	*	D4
CR022	*	D3
CR023	*	E4
CR029	*	F0
CR030	*	F0
CR032	*	F0
CR033	*	E0
CR034	*	E0
CR035	*	E0
CR036	*	C3
CR037	*	C3
CR038	*	E3
CR039	*	B2
CR041	*	E2
CR042	*	F1
CR043	*	F0
CR049	*	F2
CR050	*	F2
CR060	*	B2
CR062	*	D4
CR063	*	C4
CR065	*	G2
CR066	*	G2
CR067	*	B2
CR072	*	B3
CR075	*	B1
CR085	*	F2
CR086	*	C4
CR087	*	D2
CR090	*	F2
CR091	*	E2
CR092	*	C2
CR093	*	G0
CR098	*	F0
CR100	*	B1
CR101	*	E0
CR104	*	E1
CR110	*	F4
CV002		H7
CV003	*	J6
CV006		J7
CV007	*	J6
CV008	*	H6
CV009	*	H7
CV011	*	J6
CV012	*	J6
CV021	*	G6
CV022	*	G7
CV023	*	G7
CV025	*	G7
CV031	*	G5
CV032	*	G5
CV033	*	G4
CV036	*	G6
CV039	*	G6
CV041	*	G7
CV042	*	G6
CV044	*	G8
CV046	*	H6
CV047	*	H6
CV048	*	H7
CV062	*	H5
CV063	*	H5
CV072	*	H5
CV073	*	H5
CV082	*	H5
CV083	*	H5
CV092	*	H6
CV102		J5
CV103		J6
CV206		H8
CV207		H7
CV213	*	J6
CV216	*	J6
CV222	*	K6
CV231	*	J6
CV232	*	J6
CV234	*	K6
CV241	*	J6
CV242	*	K6
CV243	*	K5
CV246	*	H6
CX001	*	E9
CX002		F9
CX120		H10
CX130	*	J10
CX140	*	J10
CX150	*	G10
CX220		E10
CX250	*	E10
CX280	*	B8
CX282	*	D10
CX301		D10
CX350	*	E10
CX722	*	D11
CX723	*	D11
CX724	*	C11
CX726	*	D11
CX900		E10
CX901	*	F9
CX902		D9
CX910	*	H10
CX920	*	D10
CX950	*	F9
CX965	*	E9

DA001	*	A1
DA002	*	A11
DF001		K10
DF002	*	K10
DF007	*	K10
DF011		L11
DF028	*	K10
DF031		K10
DF033		K11
DH001	*	C9
DI001	*	C5
DI002	*	C7
DI040	*	C6
DI041	*	C6
DI051	*	E5
DI070	*	E5
DI071	*	F5
DL001		Q6
DL003	*	R7
DL004	*	R7
DL023	*	L6
DL030		R9
DL030		R9
DL032		R11
DL034		N9
DL036		N9
DL041		J8
DL041		J8
DL041		J8
DL043		K8
DL046		P6
DL050		M6
DL051		L6
DL052		L6
DL057	*	L7
DL060	*	M6
DL066		Q7
DL070	*	M7
DL071		K9
DL072	*	K9
DL092		L6
DL157	*	L8
DP019		P2
DP022		N1
DP027		K1
DP039		N0
DP040		N0
DP041		N0
DP050		M1
DP051	*	M2
DP052		K1
DP053		L2
DP060	*	K1
DP061		K0
DP070	*	K0
DP108		L5
DP108		M4
DP108		M5
DP109		M4
DP109		M4
DP109		M4
DP110		Q4
DP112		Q4
DP113		R5
DP126	*	K5
DP130		N4
DP131	*	N5
DP132	*	P5
DP133		N5
DP134		J8
DP140		L4
DP140		L4
DP151	*	N4
DP152	*	N5
DP160	*	L4
DP172	*	H4
DP173	*	H4
DP175	*	H3
DP178	*	H3
DP179	*	J4
DP190	*	A1
DR090	*	G0
DR091		E2
DR104		E1
DV011	*	G8
DV012	*	G8
DV025	*	G7
DV026	*	G8
DV027	*	G8
DV028	*	G8
DV038	*	G6
DV039	*	G6
DV101	*	J5
DV104	*	K5
DV108	*	K6
DV221	*	K7
DX001	*	E8
DX120	*	G10
DX151	*	F10
DX220	*	E9
DX251	*	E9
DX301	*	D10
DX351	*	E10

FI001		C7
FI002		C6
FI010		C6
FI015		C7
FI020		C6
FI030		E6
FI040		E6

IA001		A4
IA001		A7
IA001		A8
IA002		A2
IF001		L11
II050		E6
IL062		M6
IP050		M1
IP060		K0
IP130		N5
IP140		J1
IP140		J2
IR001		C2
IR002		C0
IR003		B0
IR004		F3
IV001		H6
IX001		E8
IX001		E8
IX900		E9

JA002		A1
JA003		A2
JA004		B4
JA005		B4
JA006		B4
JA007		B4
JA008	*	A5
JA009		A5
JA010		A5
JA011		A5
JA012		A5
JA013		A6
JA014		B7
JA015		B7
JA016		B8
JA017		A7
JA018	*	A8
JA019	*	B7
JA020		B10
JA021		A10
JA022		B11
JA023		B9
JA051	*	A10
JA052	*	B10
JA053	*	B9
JA054	*	B9
JA055	*	A4
JA056	*	A4
JA100		K4
JA901	*	B8
JA902		A6
JF001		K10
JF003		L10
JF004	*	J9
JF005	*	L11
JF010	*	K10
JF011	*	K10
JH005	*	C8
JH006	*	C8
JH007		B8
JH009		C11
JH903	*	C10
JI001		C7
JI004	*	D9
JI005	*	E7
JI006	*	E7
JI008	*	C6
JI009	*	E6
JI010	*	D5
JI012	*	C5
JI013	*	D5
JI014	*	F5
JI015	*	D7
JI016		B8
JI020		B8
JI021		D5
JI022		F6
JI023		F6
JI024		F4
JI901		C5
JI902	*	D5
JI903	*	D6
JI906	*	D8
JI910	*	D5
JI915	*	E7
JI916	*	E7
JI928	*	D8
JI930	*	D7
JI931	*	D8
JL001		M8
JL005	*	Q5
JL006		M7
JL007		M6
JL008		L6
JL009	*	M7
JL010	*	M8
JL011		M7
JL012		N6
JL016		K9
JL017		K9
JL018		H9
JL019		H9
JL020	*	K7
JL021		K7
JL032		N10
JL033		Q8
JL034		N7
JL035		N8
JL036		Q11
JL037		P11
JL064	*	P6
JL083		N6
JL084		N6
JL932		M10
JL933		N10
JL934		M10
JL936		N10
JL984		N6
JL985		P6
JP136		G0
JP170		K5
JP204	*	P5
JP205		H1
JP208	*	J5
JP209	*	P0
JP300		K1
JP301		L2
JP302		P1
JP304		L3
JP305		P5
JP306		M1
JP307		P4
JP309		J4
JP310		H3
JP311		J3
JP312		J3
JP313		J3
JP314		H1
JP315		H2
JP316		H1
JP317		J1
JP318		N2
JP319		M1
JP321		H3
JP322		G0
JP324		N5
JP328		R2
JP902	*	K2
JP910		J2
JP911		J2
JP913		L5
JP914		P4
JP915		P4
JP916		P4
JP917	*	P4
JR007	*	C0
JR008	*	B1
JR009	*	B3
JR010	*	B0
JR011	*	B4
JR013	*	B2
JR016	*	C0
JR017	*	C1
JR018	*	C1
JR019	*	D2
JR020	*	D1
JR021	*	D1
JR022	*	D1
JR023	*	D0
JR024	*	E3
JR026	*	D1
JR027	*	F2
JR028	*	E2
JR029	*	G0
JR030	*	E2
JR031	*	E3
JR033		F0
JR035	*	G3
JR036	*	G3
JR038	*	F4
JR040	*	G4
JR045	*	C3
JR100		A0
JR102		C3
JR103		B3
JR104		C1
JR105		D1
JR106		D1
JR107		C3
JR108		C3
JR109		C3
JR110		D3
JR111		D3
JR112		D3
JR114		D3
JR116		D4
JR117		D4
JR118		D4
JR119		E4
JR120		E4
JR121		E4
JR122		E4
JR123		E4
JR125		E3
JR126		E3
JR127		E4
JR128		F3
JR129		E2
JR131		E1
JR132		E1
JR133		E1
JR134		F1
JR137		G0
JR138		G0
JR139		F1
JR140		G1
JR141		G1
JR142		F2
JR146		F3
JR147		F3
JR148		F4
JR149		F4
JR150		G4

JR151		G4
JR152		G3
JR153		G3
JR154		G3
JR155		G3
JR156		G4
JR160		G5
JR161		G5
JR162		G2
JR163		G2
JR165		G1
JR166		B6
JR167		B6
JR168		B7
JR171		C1
JR172		F4
JR173		E1
JR174		D0
JR175		F3
JR901	*	B0
JR902	*	D0
JR903	*	B1
JR904	*	B1
JR905	*	B0
JR906	*	F3
JR907		F2
JR908	*	B0
JV001		H7
JV002		K6
JV003		G8
JV004		G5
JV005		F6
JV006	*	G7
JV007	*	H6
JV009		K5
JV010	*	L5
JV011		K6
JV012		K6
JV013	*	H6
JV014	*	H6
JV015		G5
JV016		J10
JV017	*	J5
JV021		K6
JV022		K6
JV023		J5
JV031	*	G4
JV032	*	G4
JV033		G4
JV034		G4
JX002		E8
JX003	*	E8
JX004	*	E8
JX005		G8
JX006		F8
JX007		F8
JX008		F9
JX009		G8
JX010		E9
JX011		G9
JX012		G9
JX013		F8
JX014		G10
JX015		G9
JX016		G9
JX017		G9
JX019		G10
JX020		H11
JX021		E11
JX022		E10
JX023	*	E9
JX024		F8
JX025	*	D11
JX050	*	E10
JX051	*	E11
JX055		E8
JX056	*	F8
JX920		G9
JX923		F10

LH004		C9
LH004		C9
LI020		C5
LI051		E5
LI053		E7
LI070		E5
LI090		F7
LL001		R7
LL006		M5
LL008		M8
LL029		P10
LL030		Q9
LL031		R8
LL032		R11
LL033		N11
LL034		M10
LL037		P9
LL043		K8
LL045		H9
LL046		P7
LL047		P7
LL084		N6

LP019		Q2
LP020		N3
LP020		N3
LP021		Q2
LP040		L0
LP060		N1
LP070		L3
LP112		Q5
LP112		Q5
LP140		L4
LR002	*	D0
LR003		E0
LR004		D3
LR005		B2
LR011	*	D3
LR012	*	C1
LR025	*	B1

PI030		E7
PI035		D8
PI050		D7

QI053		D7
QI070		E5
QR001		D3

RA001	*	A1
RA002	*	A0
RA003	*	B3
RA004	*	B4
RA005	*	A3
RA006	*	A3
RA007	*	A3
RA008	*	A4
RA009	*	B4
RA010	*	B4
RA011	*	B3
RA012	*	B4
RA013		A5
RA014		C3
RA015	*	A2
RA016	*	A0
RA017	*	A1
RA018	*	A1
RA019		E3
RA020	*	A10
RA021	*	A10
RA022	*	A10
RA023	*	A10
RA024	*	A9
RA025	*	A9
RA026	*	A9
RA027	*	A8
RA028	*	A9
RA029	*	A0
RA030		A7
RA031	*	A2
RA032	*	A10
RA033	*	A10
RA034	*	B4
RA035	*	A1
RA040	*	A9
RF002	*	K10
RF003		K10
RF007	*	K10
RF011		L10
RF012		K9
RF013		K9
RF015		K9
RF020		L10
RF023	*	K9
RF024	*	J9
RF025	*	K9
RF026		J8
RF036	*	K9
RF123	*	K9
RF124	*	J9
RH001	*	C10
RH002	*	C9
RH003	*	C9
RH004	*	C9
RH007		D9
RH008		H9
RH010	*	C10
RH011	*	C10
RI001	*	C7
RI002	*	E4
RI003	*	C5
RI004	*	B7
RI005	*	C5
RI006	*	C5
RI007	*	D7
RI008	*	C7
RI009	*	C8
RI012	*	C6

RI019	*	C5
RI020	*	C5
RI021	*	D7
RI022	*	C5
RI023	*	C6
RI024	*	C6
RI025	*	C6
RI026	*	C7
RI027	*	D7
RI028	*	D8
RI029	*	E8
RI030	*	E7
RI031	*	E7
RI032	*	F6
RI033	*	D8
RI034	*	C8
RI035	*	D8
RI036		D8
RI037	*	E7
RI038	*	E8
RI039	*	E8
RI040	*	C5
RI041	*	C6
RI042	*	C5
RI043	*	C6
RI044	*	C6
RI045	*	D8
RI049	*	E6
RI050	*	E6
RI051	*	E6
RI052	*	F6
RI053	*	E7
RI054	*	C6
RI055	*	E7
RI056	*	E5
RI058	*	D5
RI059	*	E5
RI061	*	E5
RI062	*	D5
RI065	*	D5
RI066	*	D6
RI070	*	F5
RI071	*	F5
RI072	*	E5
RI073	*	E5
RI074	*	E5
RI075	*	F5
RI076	*	D5
RI077	*	E6
RI078	*	F4
RI079	*	E4
RI082	*	E5
RI083	*	D5
RI084	*	D4
RI090	*	E8
RI091	*	E7
RI092	*	F7
RI093	*	F7
RI094	*	E8
RI095	*	D8
RL001	*	J5
RL002	*	J5
RL003	*	J5
RL004		Q6
RL004		Q6
RL013		Q6
RL014	*	R7
RL015		R6
RL016	*	R7
RL017	*	R7
RL018	*	R7
RL020	*	J7
RL021	*	K6
RL023		K6
RL024	*	H8
RL025		K6
RL026	*	P11
RL027	*	P11
RL028		K6
RL029		P11
RL030		Q10
RL030		Q10
RL031	*	P11
RL037		P9
RL040		K8
RL043		K8
RL044	*	L6
RL045	*	L11
RL046	*	N7
RL047		Q6
RL048	*	P7
RL050	*	L6
RL051	*	K7
RL052		M6
RL053	*	M6
RL054	*	M6
RL055	*	L7
RL056	*	L7
RL057	*	M7
RL058	*	L7
RL063	*	M7
RL064	*	P6
RL065	*	Q6
RL066	*	Q7
RL067	*	Q9
RL068	*	Q9

RL069	*	Q9
RL070	*	M7
RL071	*	L9
RL072	*	K9
RL073	*	N6
RL080	*	J6
RL081		K5
RL082		L6
RL084		P6
RL092	*	L7
RL093	*	L9
RL124	*	N9
RL125	*	N9
RL126	*	M9
RL127	*	M9
RL129		P10
RL134	*	N9
RL135	*	N9
RL136	*	M9
RL137	*	M9
RL146	*	Q7
RL155	*	L7
RL160	*	L7
RL171	*	L9
RL211	*	L8
RL214	*	K7
RP020		P0
RP022		N1
RP025	*	K2
RP025	*	K2
RP025		K2
RP026	*	K2
RP027	*	K1
RP028		L1
RP029	*	L1
RP030		L1
RP031		L1
RP032		M1
RP040		L0
RP040		L0
RP041	*	M0
RP042	*	M0
RP050		M2
RP053		L1
RP054	*	K1
RP054	*	K1
RP055		L1
RP059	*	J1
RP060	*	K1
RP061	*	K1
RP062		J0
RP063	*	K0
RP064	*	J0
RP065	*	K0
RP066		L1
RP067	*	M0
RP068	*	L1
RP069	*	L0
RP070	*	L2
RP071	*	K1
RP072	*	K0
RP100		R3
RP102	*	M3
RP112		R4
RP112		R5
RP120	*	M5
RP121	*	L5
RP122	*	M5
RP123	*	K4
RP124	*	K4
RP125	*	L4
RP126	*	K5
RP127	*	K5
RP128		K5
RP129	*	K5
RP130		L5
RP138	*	J3
RP139	*	K4
RP140	*	H2
RP141	*	H2
RP142	*	H2
RP143	*	J2
RP144	*	H0
RP145	*	H0
RP146	*	H1
RP147	*	H0
RP148	*	H1
RP149	*	J1
RP150	*	P4
RP151	*	P4
RP152	*	N5
RP156		N4
RP157	*	N4
RP158	*	P4
RP159	*	N4
RP160	*	J4
RP161	*	L4
RP162	*	K3
RP163	*	L3
RP164	*	H1
RP165	*	H1
RP166	*	H0
RP167	*	H0
RP168	*	G0
RP170	*	K6
RP171	*	H4

RP172	*	J4
RP173		K6
RP175	*	H4
RP176	*	H4
RP177	*	H3
RP179	*	J4
RP190	*	A1
RP191	*	A1
RP192	*	A2
RP193	*	A1
RP194	*	B2
RR010	*	D1
RR011	*	C2
RR012	*	C2
RR013	*	F0
RR014	*	G0
RR015		D1
RR016		D2
RR017		D1
RR018		F2
RR019		F2
RR021		D4
RR024	*	F3
RR025	*	E0
RR026	*	E0
RR027	*	E1
RR028	*	D2
RR029	*	F0
RR030	*	F0
RR031	*	F0
RR032		E3
RR033		E3
RR034		E3
RR035		E3
RR036	*	F0
RR037	*	E0
RR038	*	E0
RR039	*	E0
RR040	*	E0
RR041	*	E1
RR042	*	F1
RR043	*	F1
RR044	*	C2
RR045	*	C2
RR046	*	F1
RR047	*	F2
RR048	*	F2
RR049	*	F2
RR050	*	B2
RR051	*	B1
RR052	*	B2
RR053	*	C2
RR055	*	C2
RR056	*	C2
RR057	*	E3
RR060	*	B2
RR061	*	B1
RR062	*	B3
RR063	*	B2
RR065	*	C2
RR066	*	C2
RR067	*	B2
RR070	*	B2
RR071	*	B3
RR072		B2
RR075	*	B1
RR076	*	B1
RR084	*	G1
RR085		G2
RR086		C4
RR087		E2
RR088		C4
RR089		E2
RR091	*	G0
RR093	*	F1
RR097	*	F3
RR098	*	G1
RR099	*	G1
RR100	*	C2
RR103	*	G4
RR104	*	E1
RR105	*	G1
RR106	*	G0
RR107	*	G1
RR171	*	B2
RR910	*	F4
RR924	*	E2
RV001	*	H8
RV002		H7
RV003	*	J7
RV011	*	H9
RV012	*	H8
RV021	*	C5
RV022	*	J5
RV038	*	G5
RV041	*	G7
RV052	*	G6
RV061	*	H6
RV062	*	H6
RV063	*	H5
RV064		H5
RV066	*	H5
RV071	*	J6
RV072	*	H6
RV073	*	H5
RV074		H5

RV076	*	H5
RV081		J6
RV082	*	H6
RV083	*	H5
RV084		H5
RV086	*	H5
RV091	*	H6
RV092	*	H6
RV101	*	L6
RV107	*	J5
RV108	*	K6
RV109	*	K5
RV110	*	L6
RV112	*	K6
RV206	*	H7
RV213	*	J6
RV216	*	J6
RV221	*	K7
RV222	*	K6
RV223	*	K7
RV231		K7
RV232		J7
RV233		J7
RV241	*	J5
RV242	*	J5
RX107	*	H11
RX111	*	H11
RX115	*	H11
RX116	*	H10
RX120	*	H10
RX121	*	H10
RX122		G10
RX130	*	J11
RX131	*	F8
RX132	*	F8
RX133	*	F8
RX134	*	F8
RX140	*	J11
RX150	*	F10
RX151	*	F10
RX215	*	E11
RX220	*	F11
RX221	*	E11
RX250	*	E10
RX251	*	E10
RX280	*	B8
RX281	*	D10
RX282	*	D10
RX301	*	E11
RX303	*	E11
RX350	*	E10
RX351	*	E10
RX900		F10
RX910		G10
RX911	*	H10
RX912	*	H10
RX920	*	D9
RX921	*	D10
RX922	*	D10
RX950	*	F9
RX951	*	G8
RX955	*	E9
RX956	*	E9
RX960	*	F9
RX961	*	G8
RX965	*	E9
RX966	*	E9
RX991		H9
RX992		D9

TA001	*	A0
TA002	*	A0
TI010	*	C5
TI020	*	C6
TI030	*	D8
TI031	*	D8
TI032	*	D8
TI033	*	F6
TI034	*	E8
TI040	*	D5
TI045	*	D5
TI050	*	C6
TI070	*	E4
TI090	*	E7
TI091	*	E7
TI092	*	D8
TI093	*	D8
TL001	*	K5
TL004		Q6
TL005		R6
TL028	*	Q11
TL028		Q11
TL030		R8
TL030		R9
TL062	*	K7
TL063	*	M6
TP025		K2
TP026	*	K2
TP027	*	J0
TP060		N0
TP070	*	J0
TP129	*	L5

TP145	*	H2
TP146		J2
TP150	*	N5
TP152	*	N4
TP161	*	K3
TP162	*	K3
TP166	*	H0
TP167	*	G0
TP170	*	K6
TP175	*	H4
TP190	*	A1
TR002	*	F0
TR048	*	F2
TR091	*	G0
TR095	*	F2
TR102	*	G4
TR105	*	G1
TR106	*	G2
TV002		H7
TV063	*	H5
TV073	*	H5
TV083	*	H5
TV108		K6
TX910		H10
TX920		D10
TX950		F9
TX955	*	E9
TX960	*	F9
TX965	*	E9

RP C19
First issue 07 / 98

Updated 07 / 99

SOLDER SIDE - CÔTE SOUDURES - LÖTSEITE - LATO SALDATURE - LADO SOLDADURAS

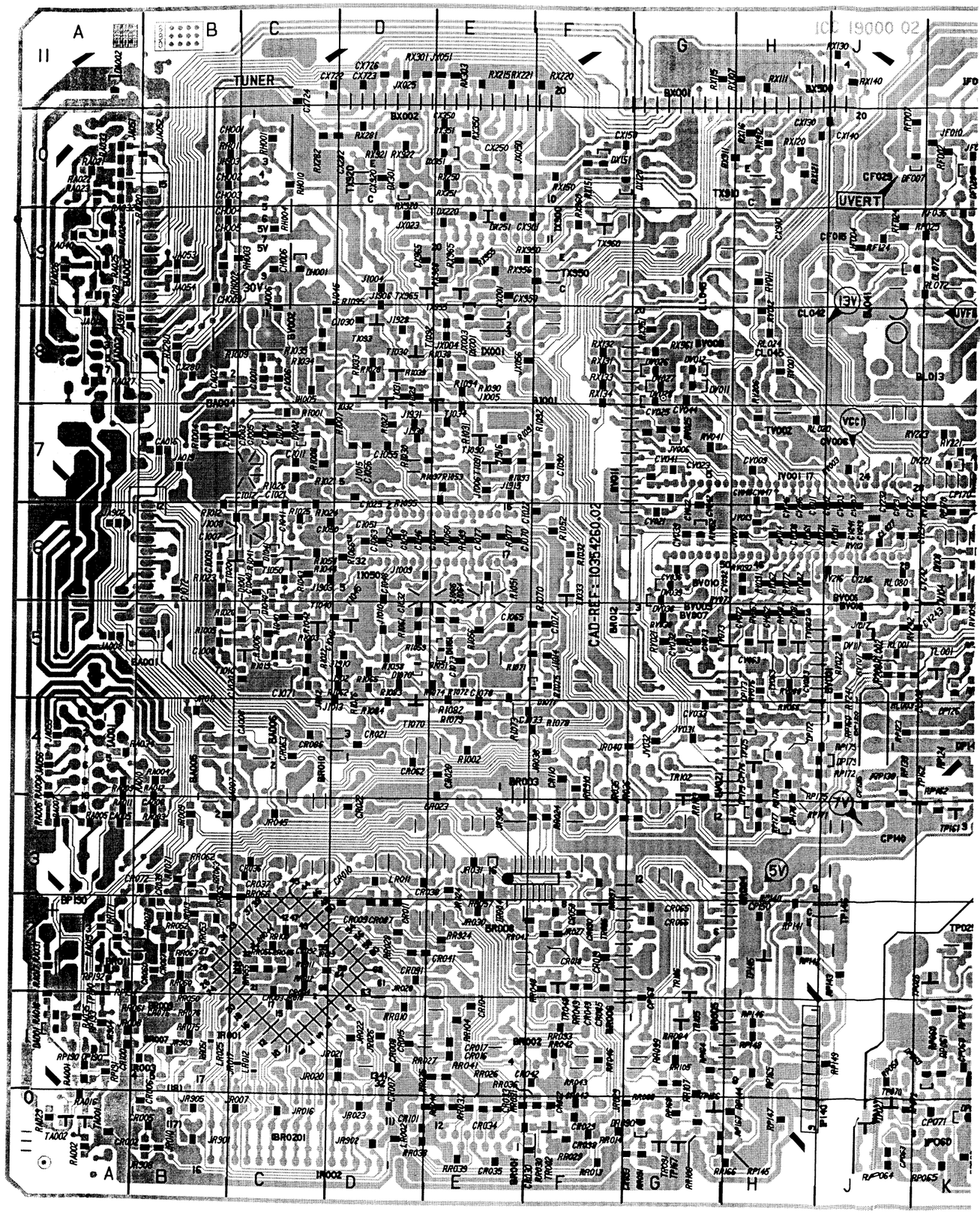

145	•	H2
146		J2
150	•	N5
152	•	N4
161	•	K3
162	•	K3
166	•	H0
167	•	G0
170	•	K6
175	•	H4
190	•	A1
202	•	F0
248	•	F2
291	•	G0
295	•	F2
302	•	G4
305	•	G1
306	•	G2
352		H7
353	•	H5
373	•	H5
383	•	H5
398		K6
410		H10
420		D10
450		F9
455	•	E9
480	•	F9
485	•	E9

SOLDER SIDE - CÔTE SOUDURES - LÖTSEITE - LATO SALDATURE - LADO SOLDADURAS

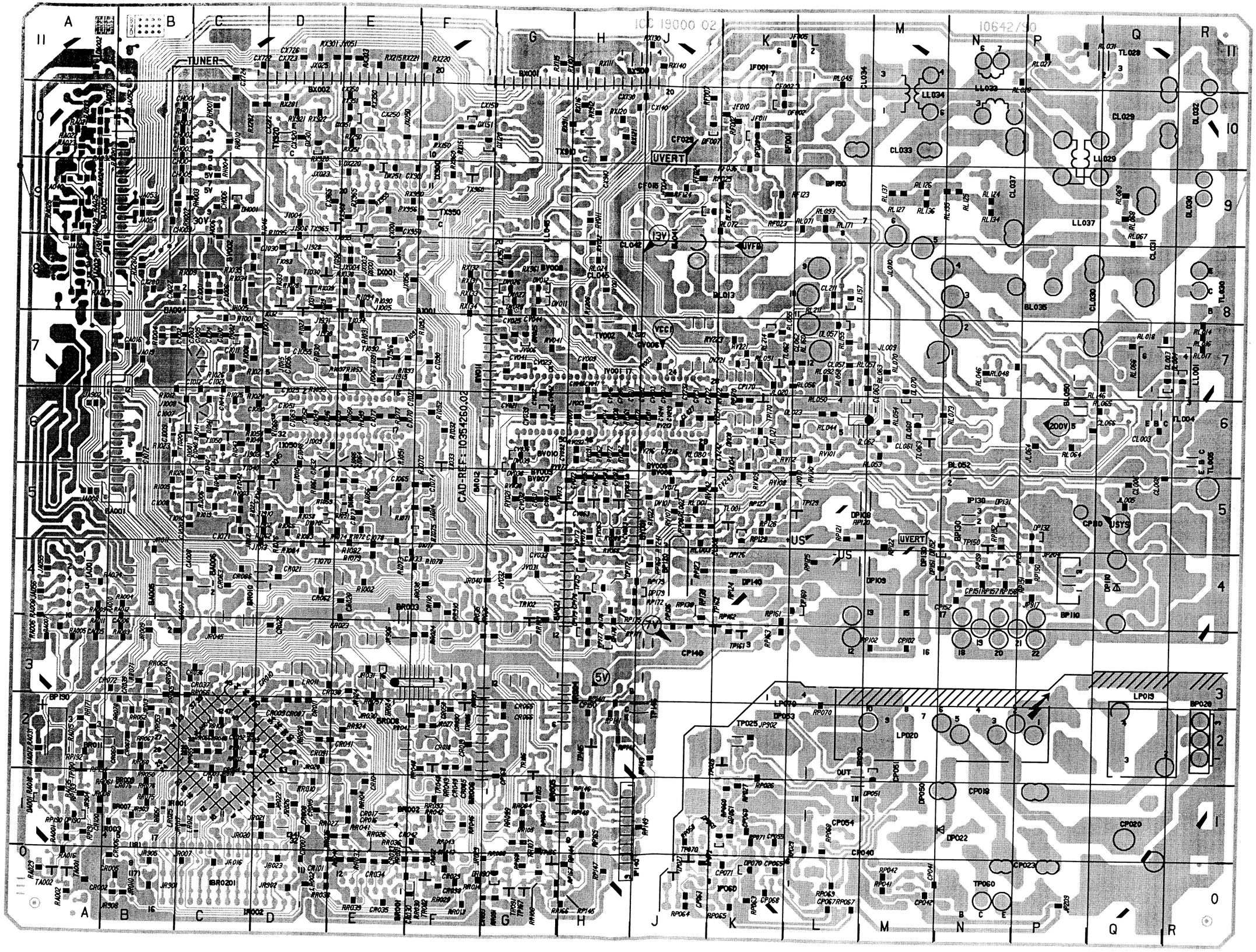

MAIN SCHEMATIC DIAGRAM - SCHEMA PLATINE PRINCIPALE - SCHALTUNG HAUPTPLATINE - SCHEMA PIASTRA PRINCIPALE - ESQUEMA PLATINA PRINCIPAL

CONVERGENCE UNIT POWER SUPPLY
ALIMENTATION PLATINE DE CONVERGENCE
DIGITAL CONVERGENCE UNIT NETZTEIL
ALIMENTAZIONE CONVERGENCE UNIT
ALIMENTACIÓN CONVERGENCE UNIT

PS. RP19.00
PS. RP19.90

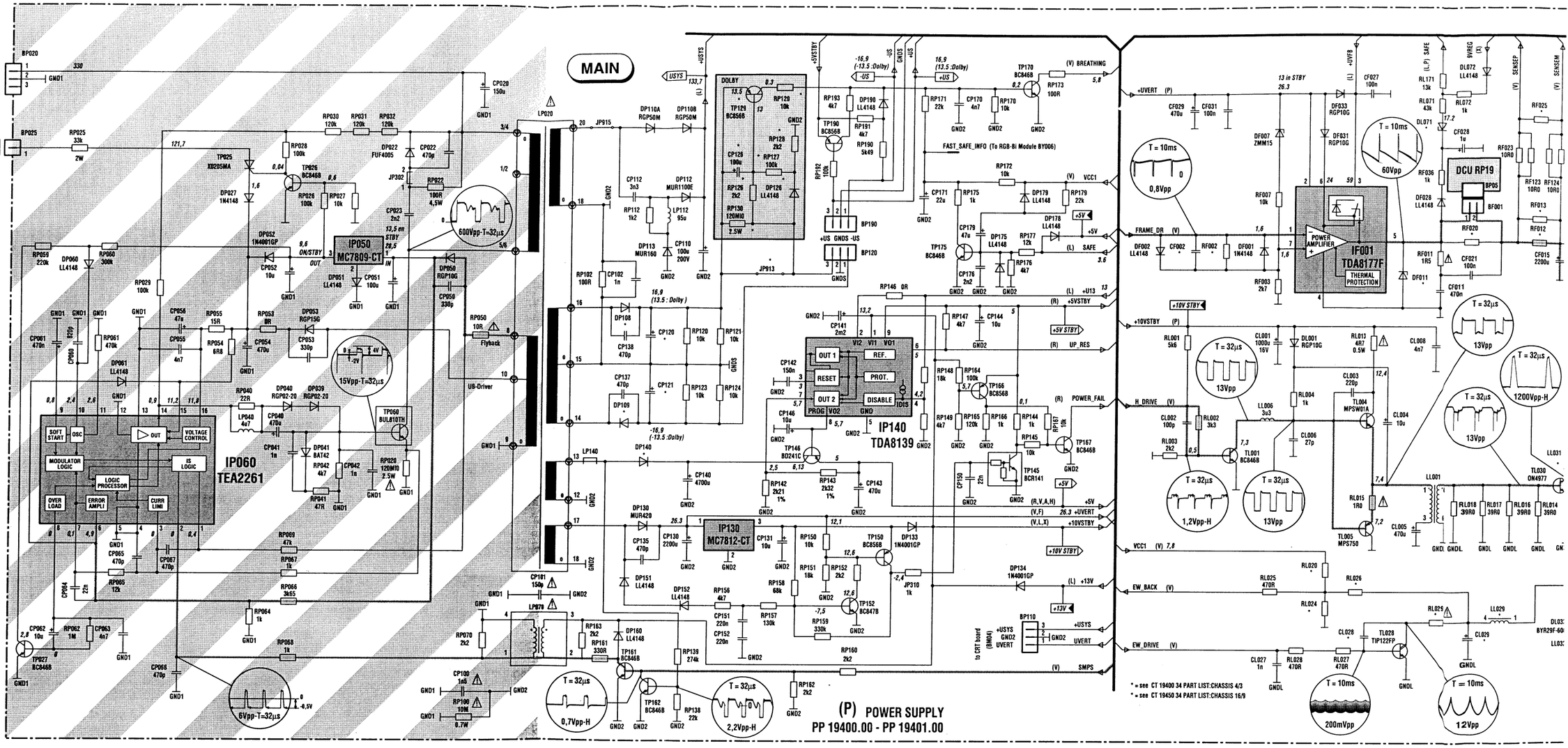

DESIGNATON POWER
PP.19400.00, PP.19401.00

*	PP 19400 00 10530090	PP 19401 00 10534010
	100Hz/Stereo	100Hz/Dolby
CP120	470u0/35V	330u0/25V
CP121	470u0/35V	1MI0/25V
CP126	-	X
DP108/109	RGP30D	BYW029-150
DP126	-	X
DP140	BYW029-150	BYV63-150
JP913	X	-
RP126/128	-	X
RP127/129	-	X
RP130	-	X
TP129	-	X

X Inserted
– Not inserted

Part of board connected to mains supply.
Partie du chassis reliée au secteur.
Primärseite des Netzteils.
Parte dello châssis collegata alla rete.
Parte del chassis conectada a la red.

Use isolating mains transformer
Utilise un transformateur isolateur du secteur
Einen Trenntrafo verwenden
Utilizar un transformador aislador de red
Utilizzare un transformatore per isolarvi dalla rete

Note :
Power Supply primary circuit measurements.
- Use only (GND1) connection point.
Attention :
Mesure dans la partie primaire de l'alimentation
- Utiliser la masse du bloc alimentation (GND1).
Achtung :
Bei Messungen im Primärnetzteil
- Primärnetzteilmasse verwenden (GND1).
Attenzione :
misure nell'alimentatore primario
- usare massa alimentazione primario (GND1).
Cuidado :
Medida en el bloque de alimentacion
- Utilizar la masa del bloque de alimentacion (GND1).

Safety Part
When repairing, use original part only
Piece de securite
N'utilisez que les pieces d'origine
Sicherheitsbauteil
Bei Ersatz nur Originalteil verwenden
Componenti di sicurezza
Per la riparazione utilizzare solo componenti originali
Pieza de seguridad
Utilice solo piezas originales

*	Deflection - Basic Partlists	
	100Hz 4/3	100Hz 16/9
	CT 19400 34	CT 19450 34
	10 53 01 10	10 61 54 40
CF002	680p +/-10% 50V	
CL028	1n +10% 100V	
CL029	3u3 +20% 63V	
CL030	1n9 +/- 5% 2kV	
CL031	10n +/- 3.5% 1k5V	
CL032	20n +/-5% 400V	
CL036	2u2 +20% 250V	
CL037	510n +/-5% 250V	
CL211	470p +/-10% 50V	
DF011	BZW04-48 56V	
DL034	EGP10D 200V	
DL036	EGP10D 200V	
DL071	BZX55C20 20V	
DL092	SLP 1N4148 100V	
LL008	TF-DST-GDS35	
LL029	130u0H +/-5%	
LL030	900HM 50MHz	
LL031	WIREBARE	
LL037	9u0H +10%	
LL046	22u0H +10%	
LL047	14u5H +/-5%	
RF002	10k +5%	
RF012	1R0 +1%	1R82 +1%
RF013	1R21 +1%	

*	Deflection - Basic Part	
	100Hz 4/3	100Hz
	CT 19400 34	CT 1945
	10 53 01 10	10 61 54
RF020	270R +1%	
RF025	100R +5%	120R +
RL020	7k15 +1%	
RL024	4k02 +1%	
RL026	61k9 +1%	
RL029	2R2 +5%	
RL030	2R2 +5%	
RL046	3k3 +5%	
RL048	3k3 +5%	
RL051	270k +5%	
RL053	16k2 +1%	30k9 +
RL057	60k4 +1%	
RL066	4k22 +1%	
RL082	59k +1%	
RL092	4k7 +5%	
RL124	7k5 +5%	
RL125	7k5 +5%	
RL126	7k5 +5%	
RL127	7k5 +5%	
RL134	7k5 +5%	
RL135	7k5 +5%	
RL136	7k5 +5%	
RL137	7k5 +5%	
RL211	6k8 +5%	

UPTPLATINE - SCHEMA PIASTRA PRINCIPALE - ESQUEMA PLATINA PRINCIPAL

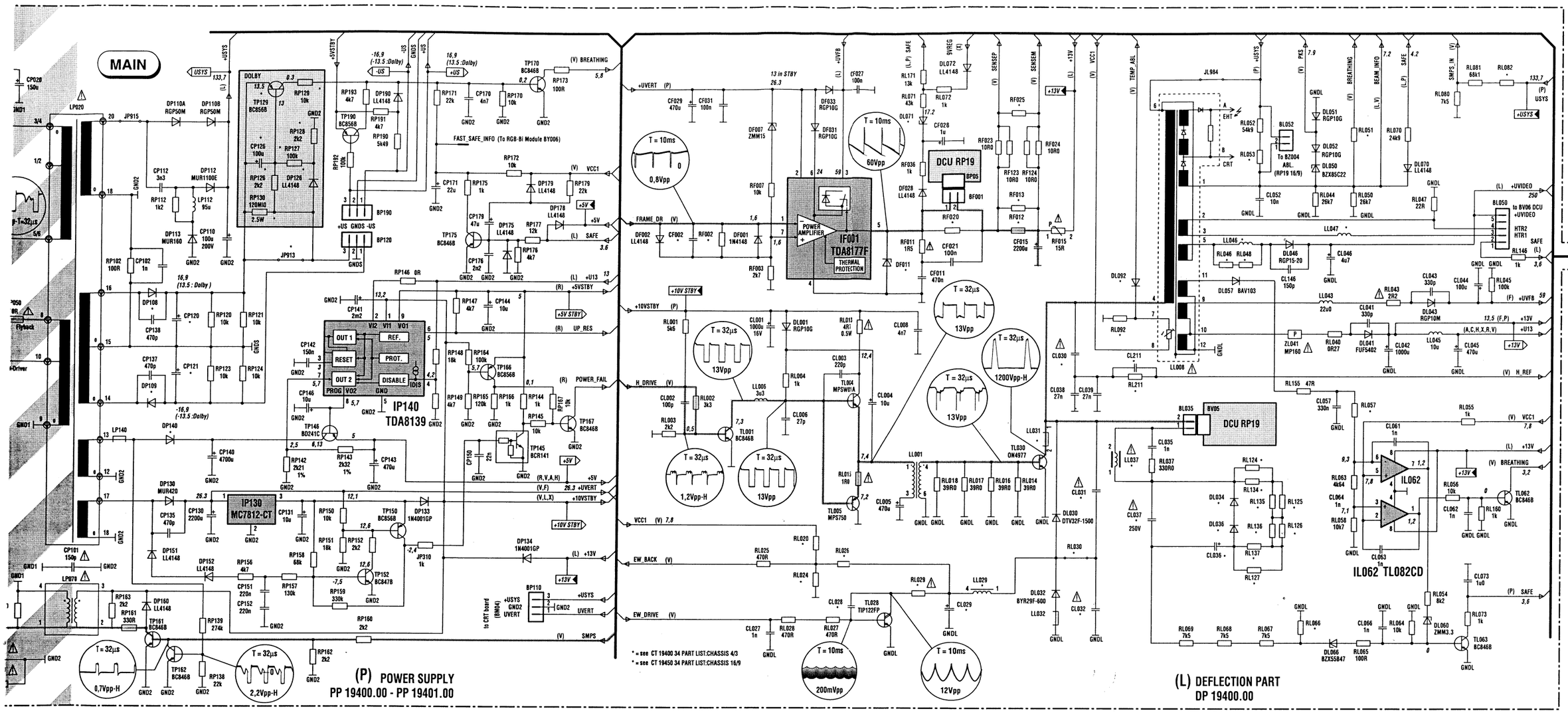

Note :
Power Supply primary circuit measurements.
- Use only (GND1) connection point.

Attention :
Mesure dans la partie primaire de l'alimentation
- Utiliser la masse du bloc alimentation (GND1).

Achtung :
Bei Messungen im Primärnetzteil
- Primärnetzteilmasse verwenden (GND1).

Attenzione :
misure nell'alimentatore primario
- usare massa alimentazione primario (GND1).

Cuidado :
Medida en el bloque de alimentacion
- Utilizar la masa del bloque de alimentacion (GND1).

⚠ Safety Part
When repairing, use original part only
Piece de securite
N'utilisez que les pieces d'origine
Sicherheitsbauteil
Bei Ersatz nur Originalteil verwenden
Componenti di sicurezza
Per la riparazione utilizzare solo componenti originali
Pieza de seguridad
Utilice solo piezas originales

*	Deflection - Basic Partlists	
	100Hz 4/3	100Hz 16/9
	CT 19400 34	CT 19450 34
	10 53 01 10	10 61 54 40
CF002	680p +/-10% 50V	
CL028	1n +10% 100V	
CL029	3u3 +20% 63V	
CL030	1n9 +/- 5% 2kV	
CL031	10n +/- 3.5% 1k5V	
CL032	20n +/-5% 400V	
CL036	2u2 +20% 250V	
CL037	510n +/-5% 250V	
CL211	470p +/-10% 50V	
DF011	BZW04-48 56V	
DL034	EGP10D 200V	
DL036	EGP10D 200V	
DL071	BZX55C20 20V	
DL092	SLP 1N4148 100V	
LL008	TF-DST-GDS35	
LL029	130u0H +/-5%	
LL030	900HM 50MHz	
LL031	WIREBARE	
LL037	9u0H +10%	
LL046	22u0H +10%	
LL047	14u5H +/-5%	
RF002	10k +5%	
RF012	1R0 +1%	1R82 +1%
RF013	1R21 +1%	

*	Deflection - Basic Partlists	
	100Hz 4/3	100Hz 16/9
	CT 19400 34	CT 19450 34
	10 53 01 10	10 61 54 40
RF020	270R +1%	
RF025	100R +5%	120R +5%
RL020	7k15 +1%	
RL024	4k02 +1%	
RL026	61k9 +1%	
RL029	2R2 +5%	
RL030	2R2 +5%	
RL046	3k3 +5%	
RL048	3k3 +5%	
RL051	270k +5%	
RL053	16k2 +1%	30k9 +1%
RL057	60k4 +1%	
RL066	4k22 +1%	
RL082	59k +1%	
RL092	4k7 +5%	
RL124	7k5 +5%	
RL125	7k5 +5%	
RL126	7k5 +5%	
RL127	7k5 +5%	
RL134	7k5 +5%	
RL135	7k5 +5%	
RL136	7k5 +5%	
RL137	7k5 +5%	
RL211	6k8 +5%	

Note : the last two numbers of the CT xxxx part list name indicates the system voltage.
e.g. CT 19400 34 → Usys 134V

Note : Les deux derniers chiffres de la liste des composants CT xxxx représentent la tension système.
ex. CT 19400 34 → Usys 134V

Nota: Los dos últimos números de la denominación CT xxxx, indica la tensión Usys
e.g. CT 19400 34 → Usys 134V

COMPLETE PCB DIAGRAM - SCHEMA PLATINE EQUIPEE - SCHALTUNG LEITERPLATTE KPL - SCHEMA PIASTRA COMPLETA - ESQUEMA PLATINA EQUIPADA

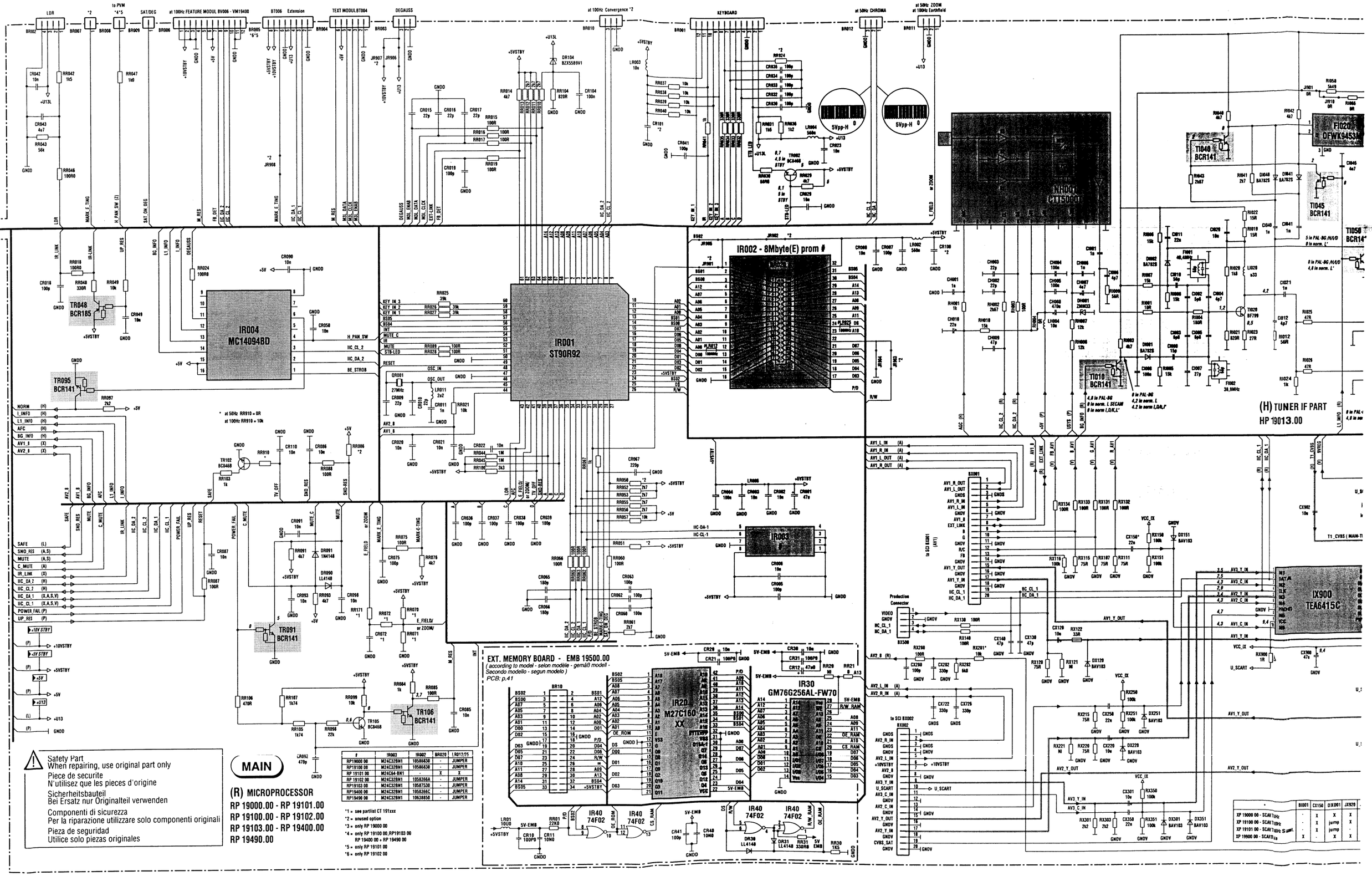

#	IR003	IR002	BR020	LR012/25
RP19000 00	M24C32BN1	10586838	-	JUMPER
RP19100 00	M24C32BN1	10586838	-	JUMPER
RP 19101 00	M24C64-BN1		X	X
RP 19102 00	M24C32BN1	1058366A	-	JUMPER
RP19103 00	M24C32BN1	10587538	-	JUMPER
RP19400 00	M24C32BN1	1058366C	-	JUMPER
RP19490 00	M24C32BN1	10638858	-	JUMPER

*1 = see partlist CT 191xxx
*2 = unused option
*3 = only RP 19000 00
*4 = only RP 19100 00,RP19103 00
RP 19400 00 + RP 19490 00
*5 = only RP 19101 00
*6 = only RP 19102 00

*	BI001	CX150	DX001	JX920
XP 19000 00 - SCART 50Hz	-	X	X	X
XP 19100 00 - SCART 50Hz	-	X	jump	X
XP 19101 00 - SCART 50Hz Small	-	X	jump	-
XP 19900 00 - SCART 60Hz	X	-	X	X

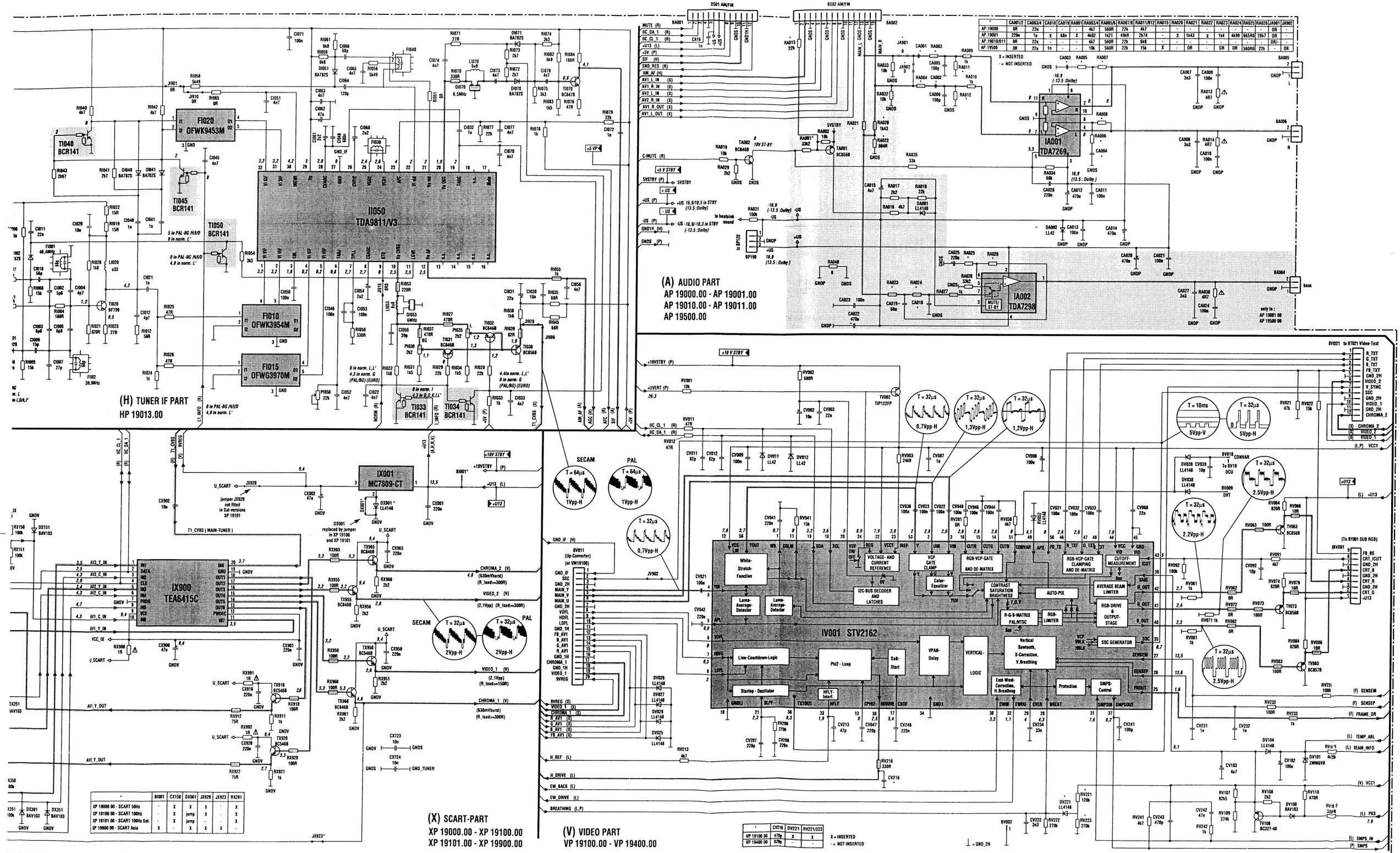

*	CA001/2	CA003/4	CA018	CA019	RA001	RA003/4	RA005/6	RA007/8	RA011/012	RA015	RA020	RA021	RA022	RA023	RA024	RA025	RA026	JA901	JA902
AP.19000	0R	22u	-	-	-	4k7	560R	22k	4k7	-	-	-	-	-	-	-	-	OR	-
AP.19001	220n	1u	X	68n	X	4k02	1k21	49k9	2k74	-	X	1k43	X	1k4	4k99	665R0	28k7	OR	-
AP.19010/011	0R	22u	-	-	-	4k7	560R	22k	6k8	-	-	-	-	-	-	-	-	OR/-	-
AP.19500	0R	22u	1n	-	-	10k	560R	22k	15k	X	-	OR	-	OR	OR	560R0	22k	-	OR

X = INSERTED
- = NOT INSERTED

*	BI001	CX150	DX001	JX920	JX923	RX281
XP 19000 00 - SCART 50Hz	-	X	X	X	-	X
XP 19100 00 - SCART 100Hz	-	X	jump	X	-	X
XP 19101 00 - SCART 100Hz Sat.	-	X	jump	-	-	X
XP 19900 00 - SCART Asia	X	-	X	X	X	-

*	CV216	DV221	RV221/223
VP 19100 00	470p	X	X
VP 19400 00	820p	-	-

X = INSERTED
- = NOT INSERTED

VIDEO AMPLIFIER BOARD - PLATINE AMPLIFICATEURS VIDEO - VIDEOVERSTÄRKERPLATTE - PIASTRA AMPLIFICATORE VIDEO - PLATINA AMPLIFICADOR VIDEO

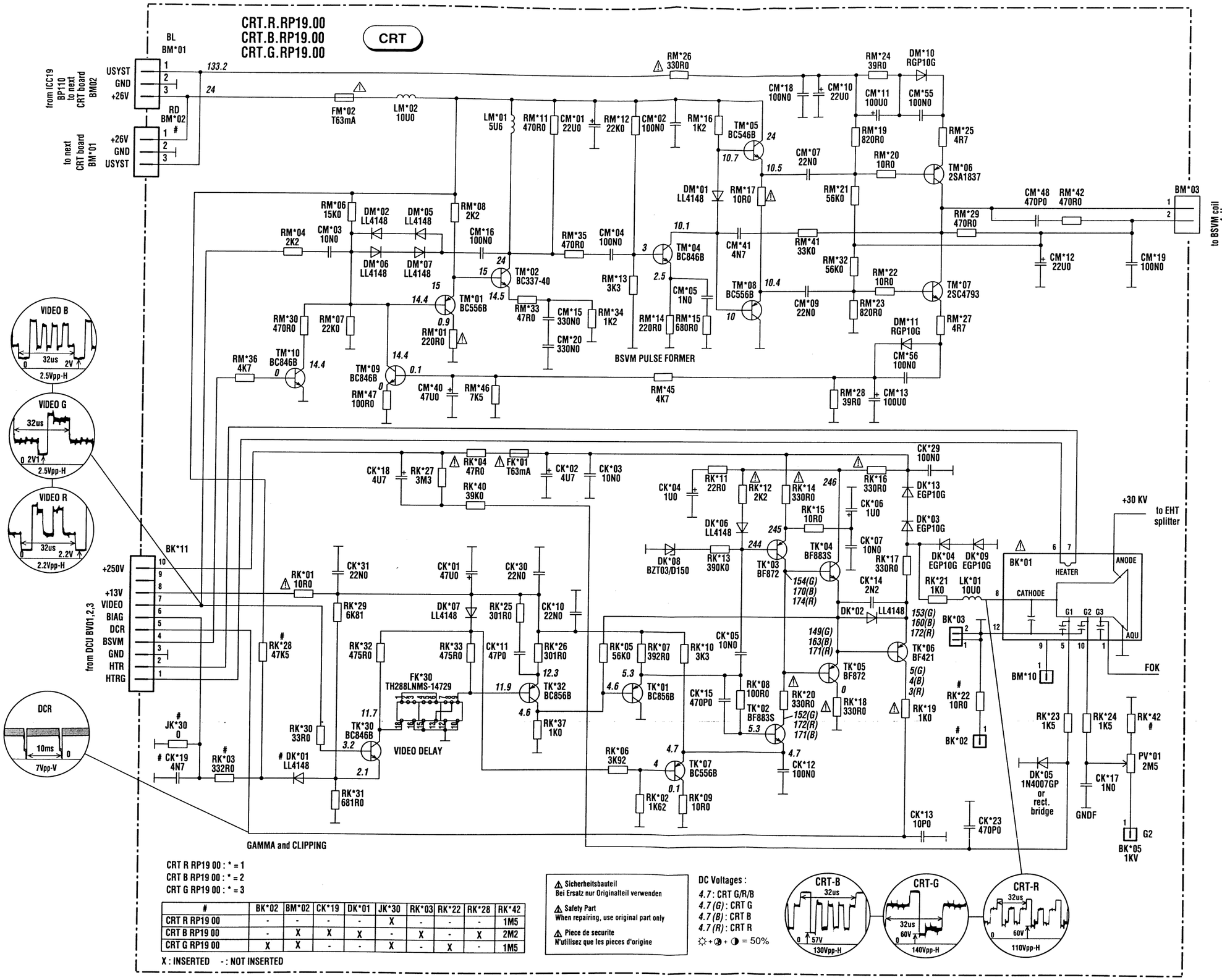

#	BK*02	BM*02	CK*19	DK*01	JK*30	RK*03	RK*22	RK*28	RK*42
CRT R RP19 00	-	-	-	-	X	-	-	-	1M5
CRT B RP19 00	-	X	X	X	-	X	-	X	2M2
CRT G RP19 00	X	X	-	-	X	-	X	-	1M5

X : INSERTED - : NOT INSERTED

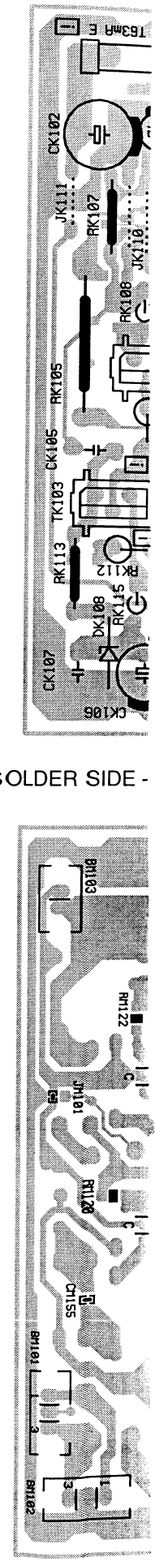

SOLDER SIDE -

CRT R - RP19

COMPONENT SIDE - COTE COMPOSANTS - BESTÜCKUNGSSEITE
LATO COMPONENTI - LADO COMPONENTES

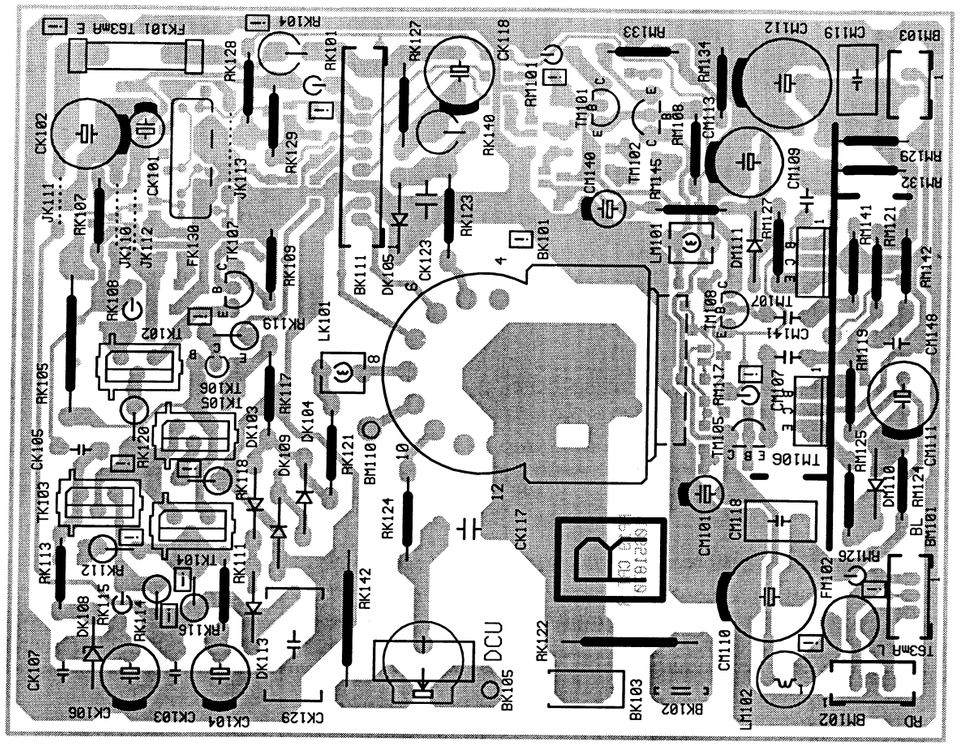

SOLDER SIDE - CÔTE SOUDURES - LÖTSEITE - LATO SALDATURE - LADO SOLDADURAS

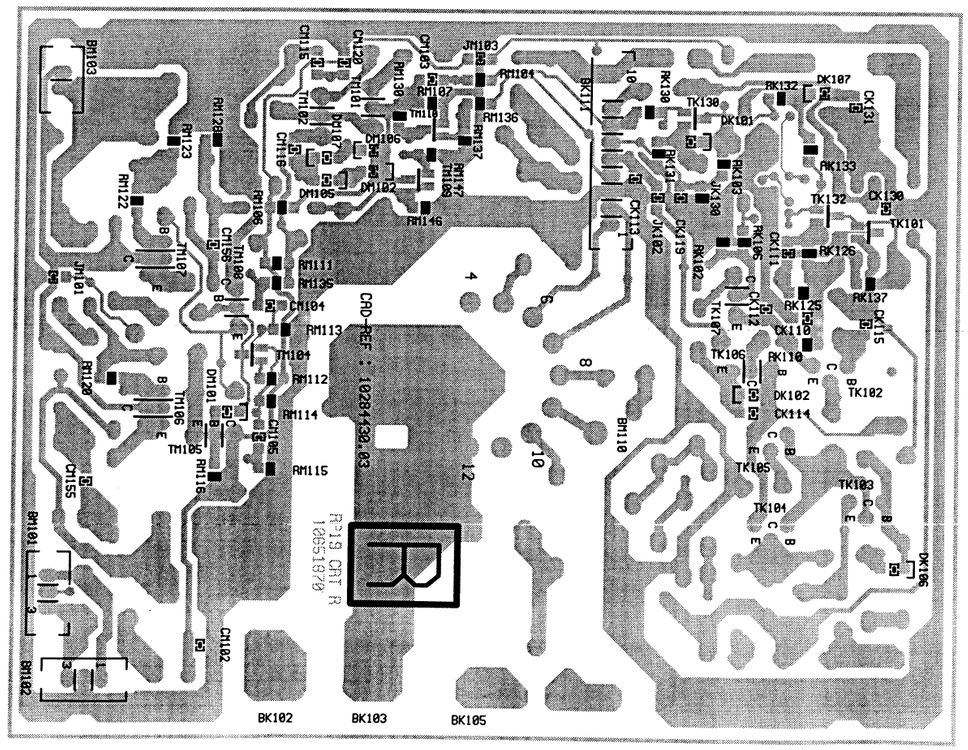

CRT G - RP19

COMPONENT SIDE - COTE COMPOSANTS - BESTÜCKUNGSSEITE
LATO COMPONENTI - LADO COMPONENTES

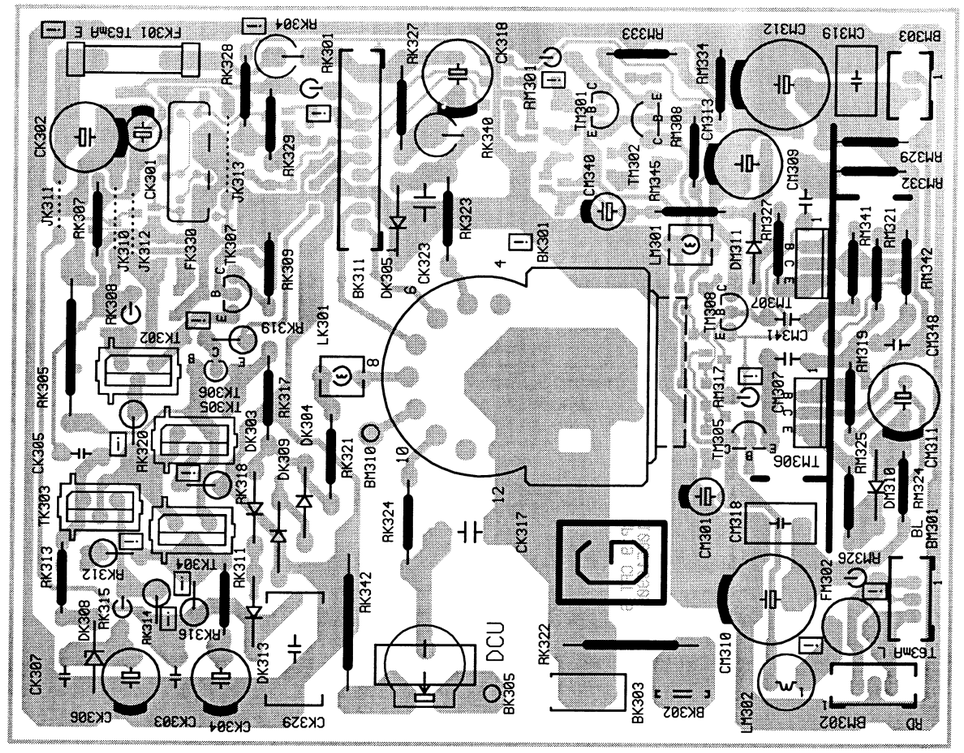

SOLDER SIDE - CÔTE SOUDURES - LÖTSEITE - LATO SALDATURE - LADO SOLDADURAS

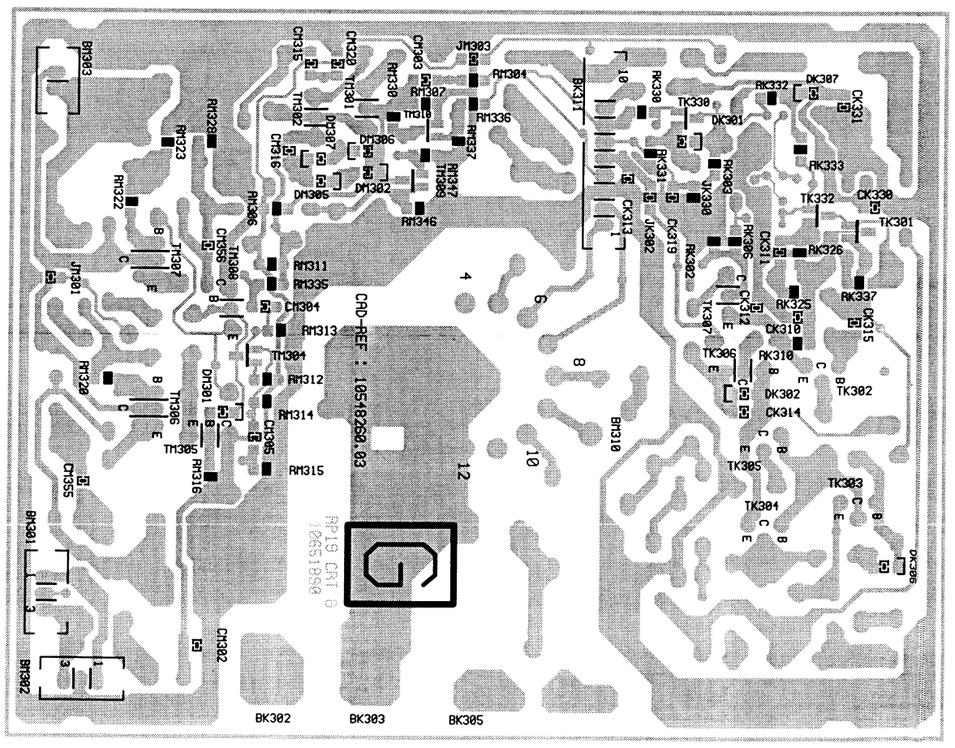

CRT B - RP19

COMPONENT SIDE - COTE COMPOSANTS - BESTÜCKUNGSSEITE
LATO COMPONENTI - LADO COMPONENTES

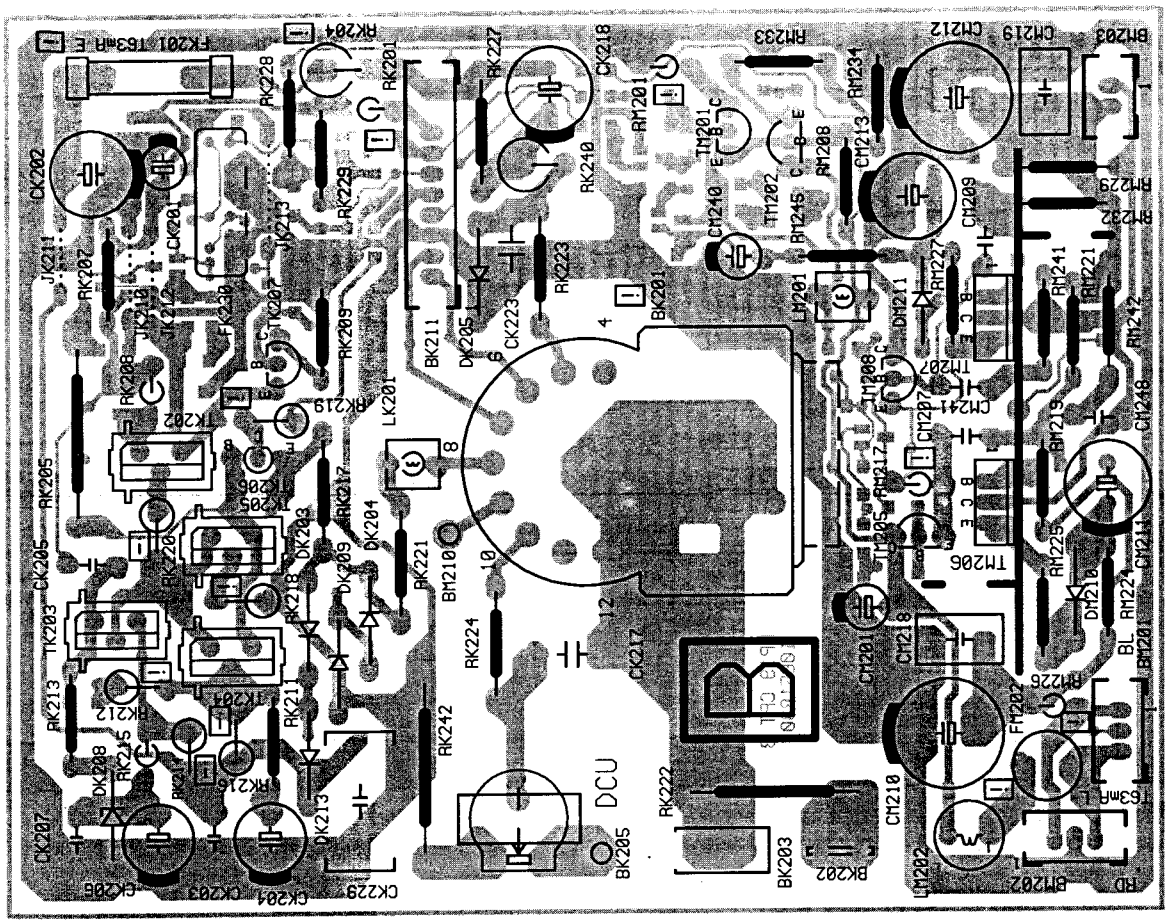

SOLDER SIDE - CÔTE SOUDURES - LÖTSEITE - LATO SALDATURE - LADO SOLDADURAS

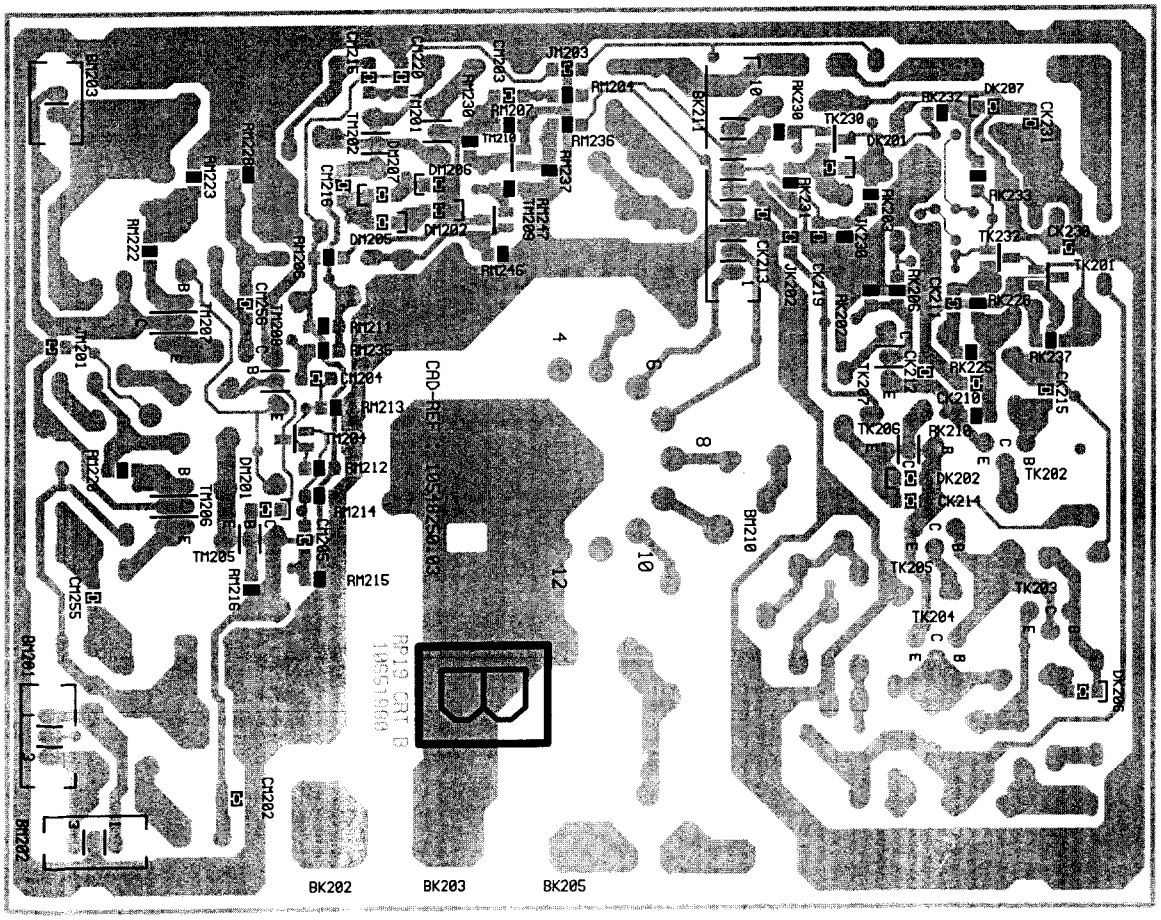

SUB.RGB-BI RP19.00

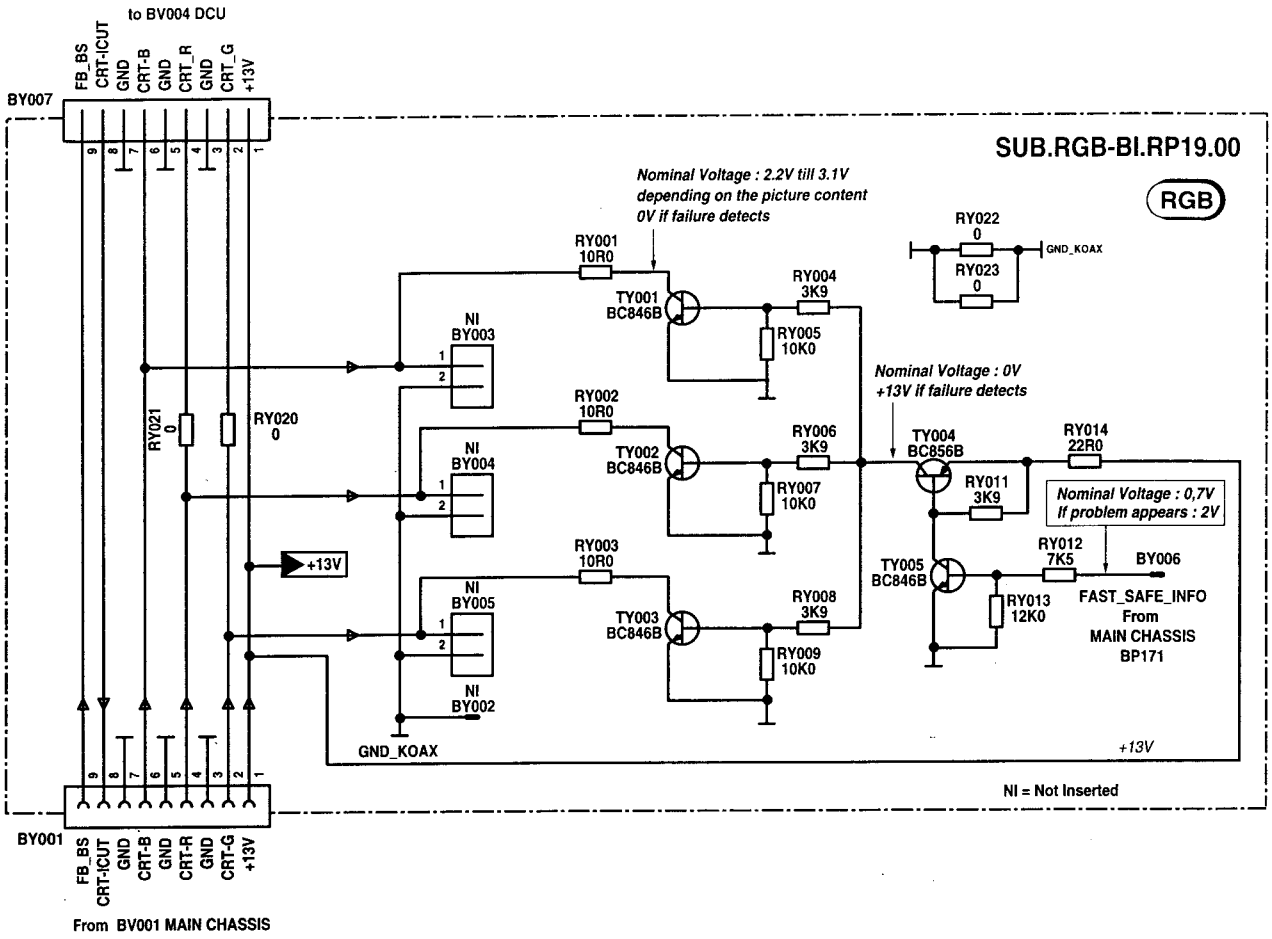

COMPONENT SIDE - COTE COMPOSANTS - BESTÜCKUNGSSEITE
LATO COMPONENTI - LADO COMPONENTES

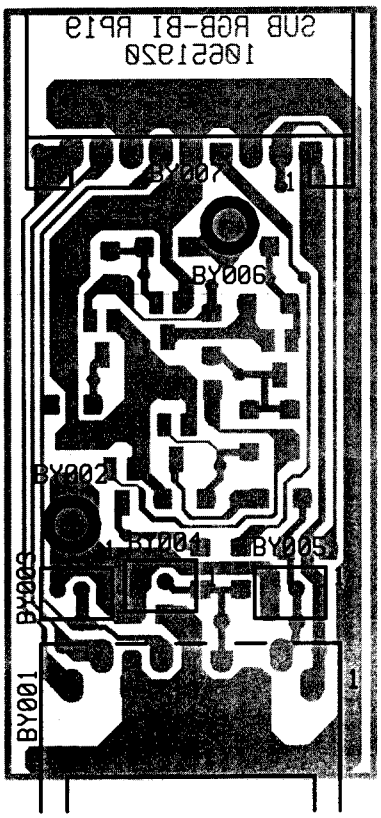

SOLDER SIDE - CÔTE SOUDURES - LÖTSEITE - LATO SALDATURE - LADO SOLDADURAS

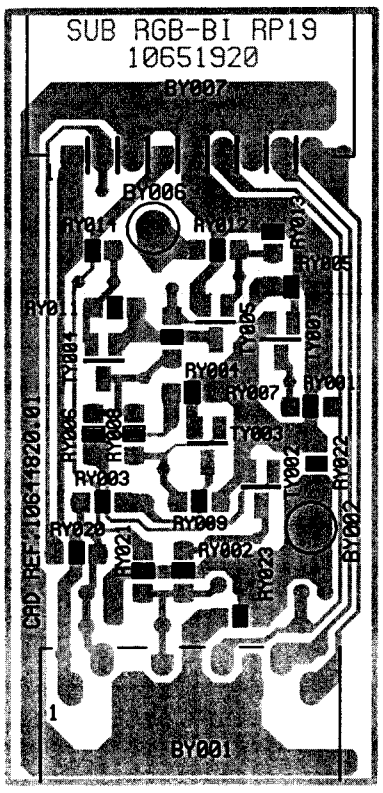

AVERAGE BEAM LIMITER - LIMITATION DU COURANT DE FAISEAU - STRAHLSTROM BEGRENZUNG - LIMITATORE CORRENTE DI RAGGIO - LIMITADOR DE CORRIENTE DE HAZ

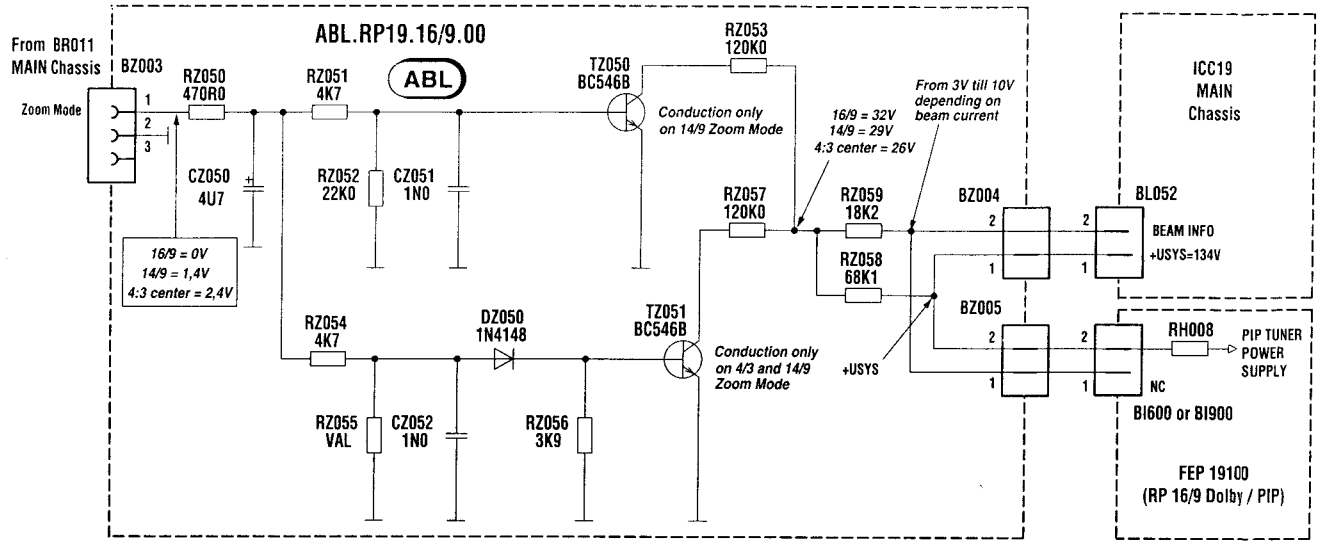

COMPONENT SIDE - COTE COMPOSANTS - BESTÜCKUNGSSEITE
LATO COMPONENTI - LADO COMPONENTES

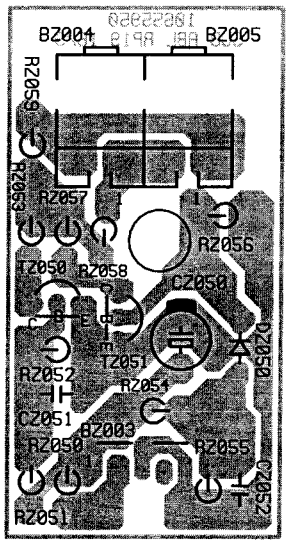

SOLDER SIDE - CÔTE SOUDURES - LÖTSEITE - LATO SALDATURE - LADO SOLDADURAS

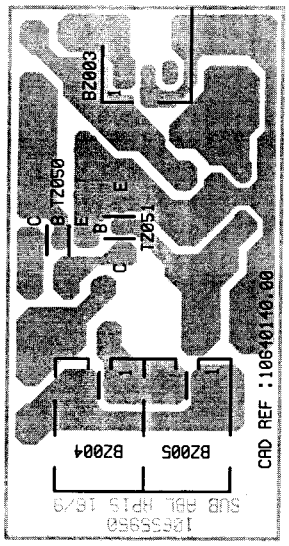

EXTENSION MEMORY BOARD - PLATINE EXTENSION MEMOIRE - SPEICHERERWEITERUNGSPLATINE - PIASTRA ESTENSIONE MEMORIA - PLACA EXTENSION DE MEMORIA *(Schematic Diagram : Main Board p.31)*

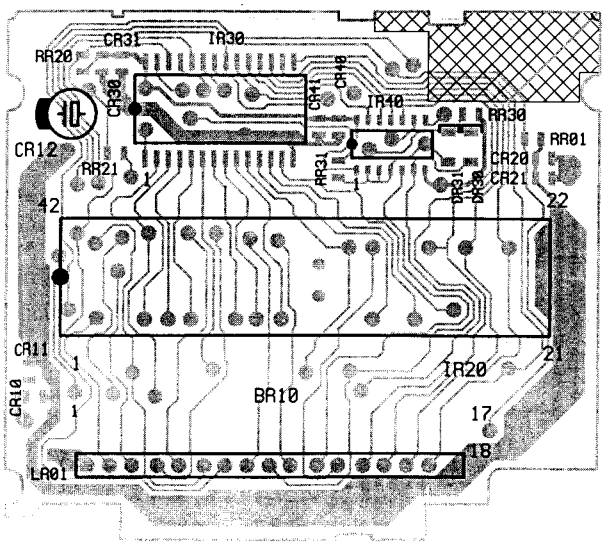

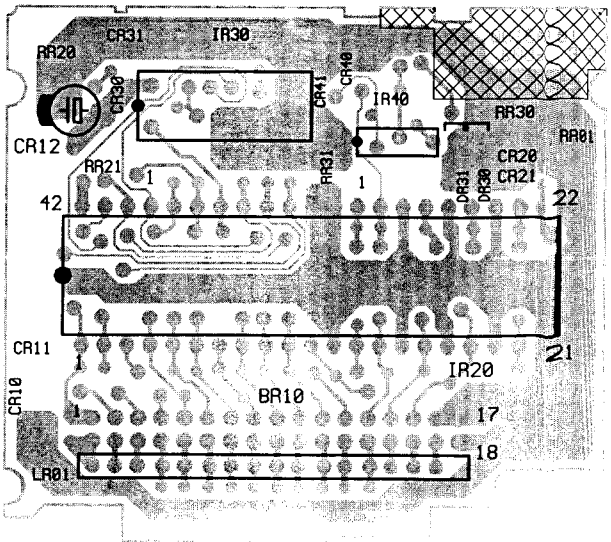

VM19100

COMPONENT SIDE - COTE COMPOSANTS - BESTÜCKUNGSSEITE
LATO COMPONENTI - LADO COMPONENTES

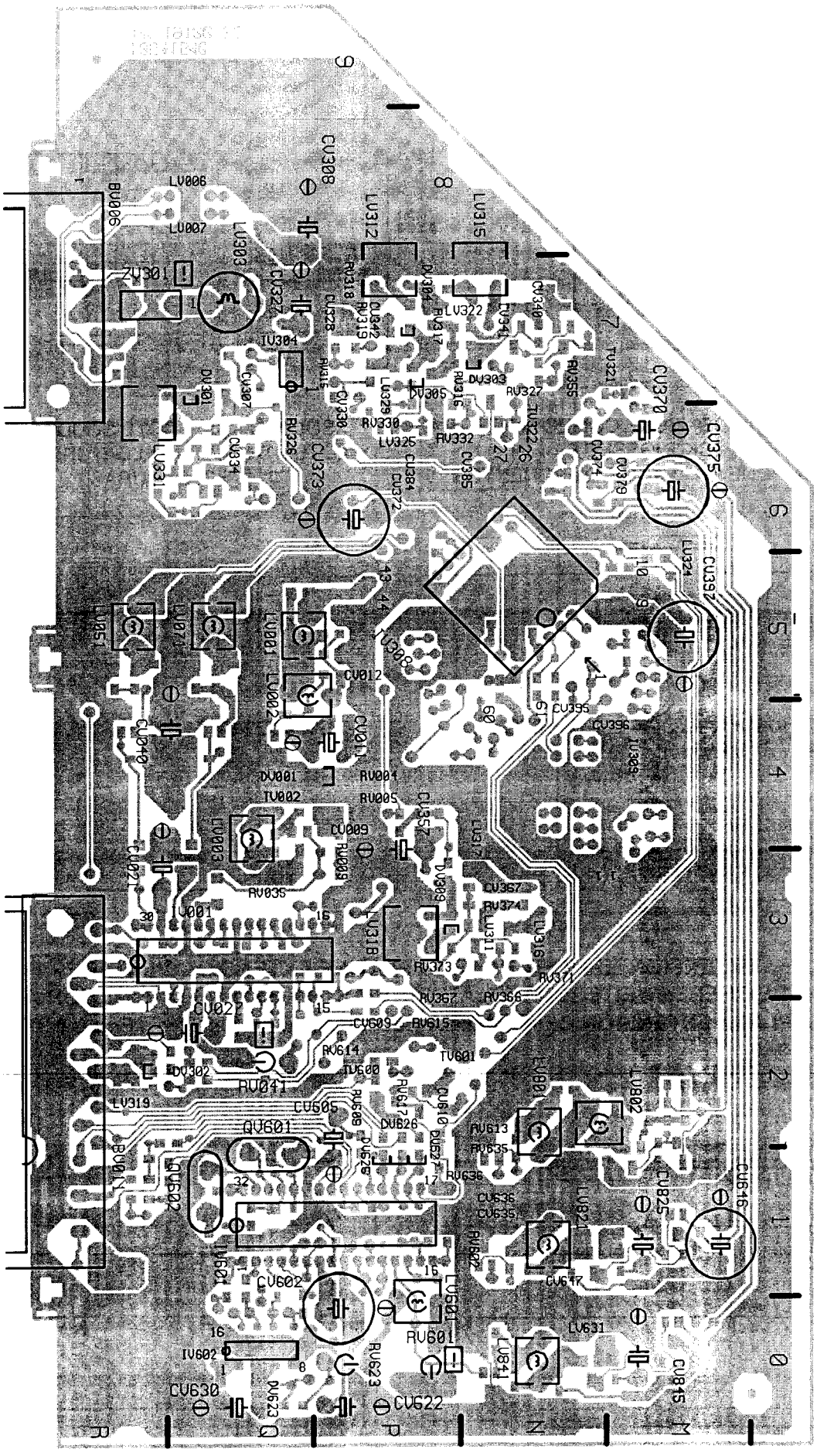

VM19100

SOLDER SIDE - CÔTE SOUDURES - LÖTSEITE - LATO SALDATURE - LADO SOLDADURAS

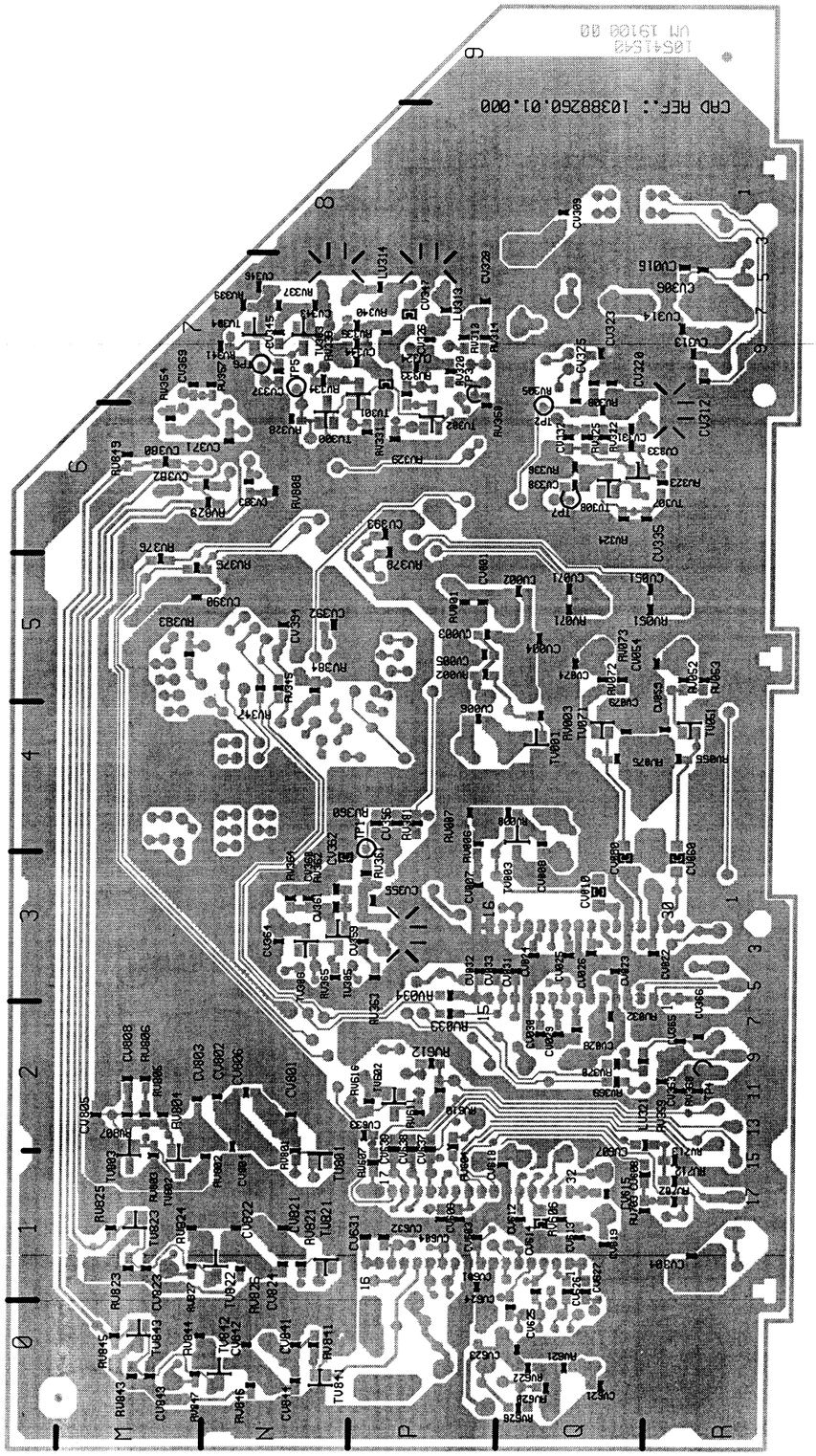

VIDEO MODULE - MODULE VIDEO - VIDEO BAUSTEIN - MODULO VIDEO - MÓDULO VIDEO
VM 19100

VM.19100.00

VM

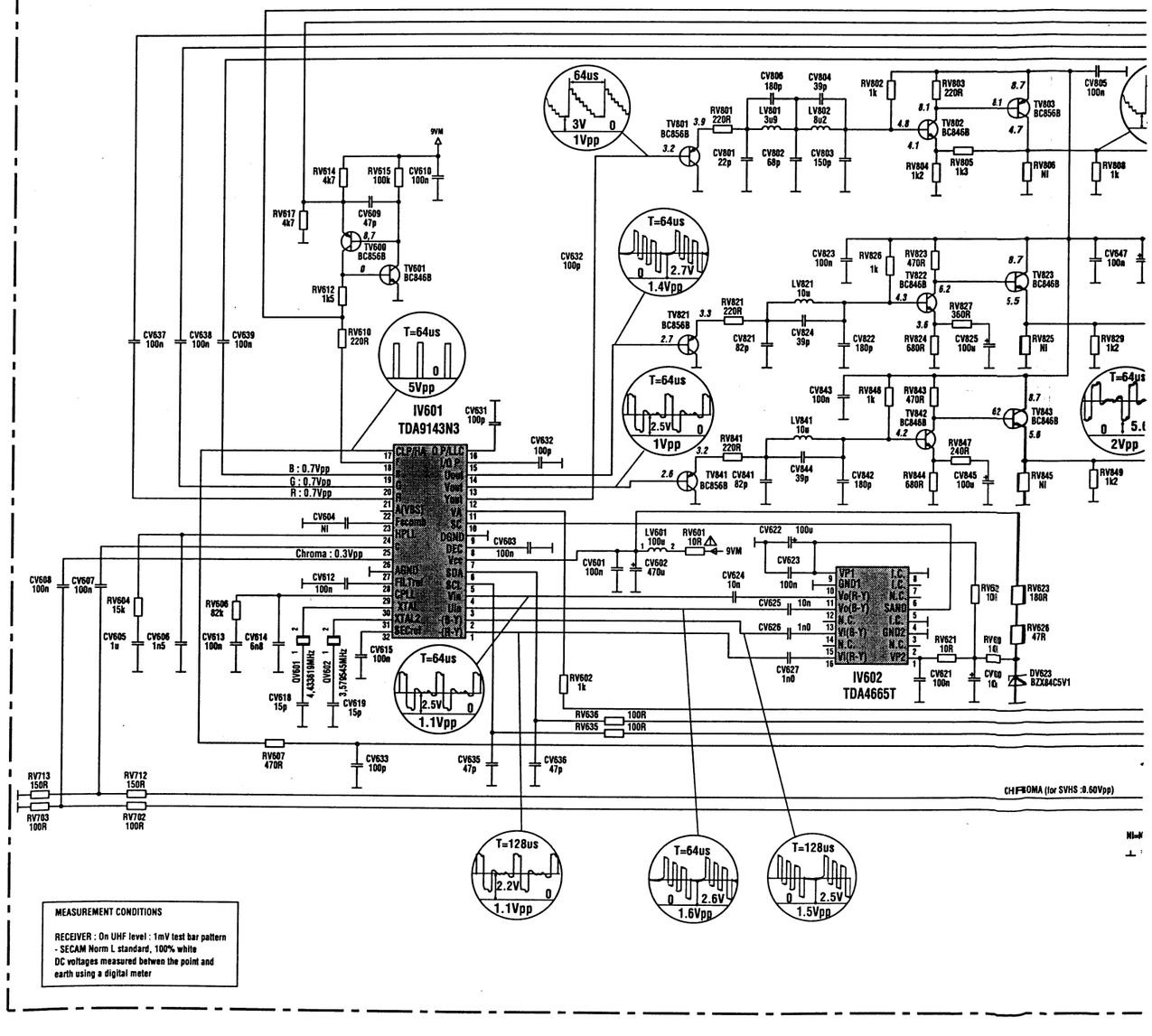

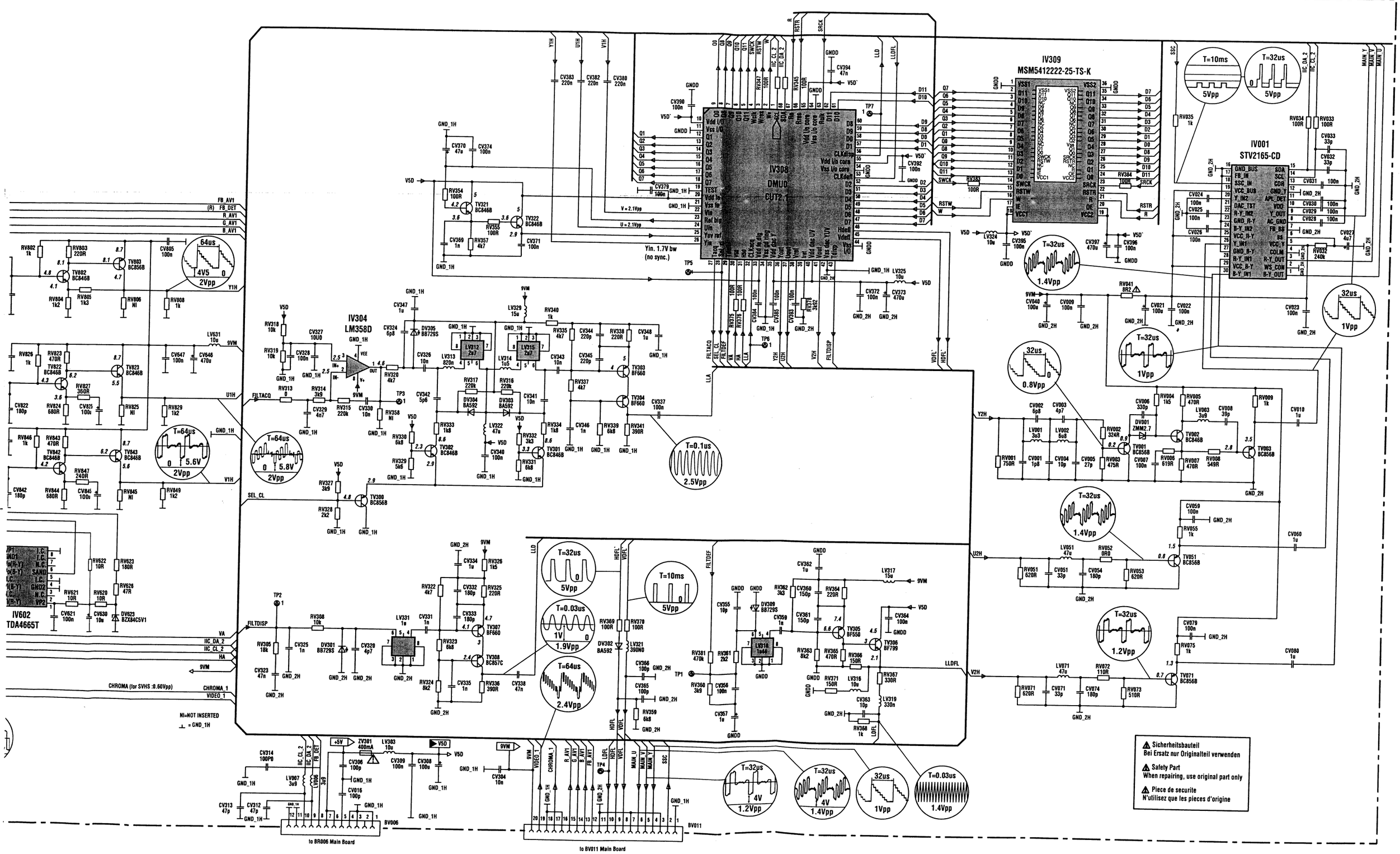
IV309
MSM5412222-25-TS-K
IV308
DMUD
CUT2.1
IV001
STV2165-CD
IV304
LM358D
IV602
TDA4665T
Yin. 1.7V bw
(no sync.)
T=10ms
5Vpp
T=32us
5Vpp
T=32us
1.4Vpp
32us
1Vpp
T=32us
1Vpp
32us
0.8Vpp
T=64us
5.6V
2Vpp
T=64us
5.8V
2Vpp
T=0.1us
2.5Vpp
T=32us
5Vpp
T=10ms
5Vpp
T=0.03us
1V
1.9Vpp
T=64us
2.4Vpp
T=32us
1.4Vpp
T=32us
1.2Vpp
T=32us
4V
1.2Vpp
T=32us
4V
1.4Vpp
32us
1Vpp
T=0.03us
1.4Vpp
CHROMA (for SVHS :0.60Vpp)
NI=NOT INSERTED
to BR006 Main Board
to BV011 Main Board
Sicherheitsbauteil
Bei Ersatz nur Originalteil verwenden
Safety Part
When repairing, use original part only
Piece de securite
N'utilisez que les pieces d'origine

VIDEO MODULE - MODULE VIDEO - VIDEO BAUSTEIN - MODULO VIDEO - MÓDULO VIDEO
VM 19400

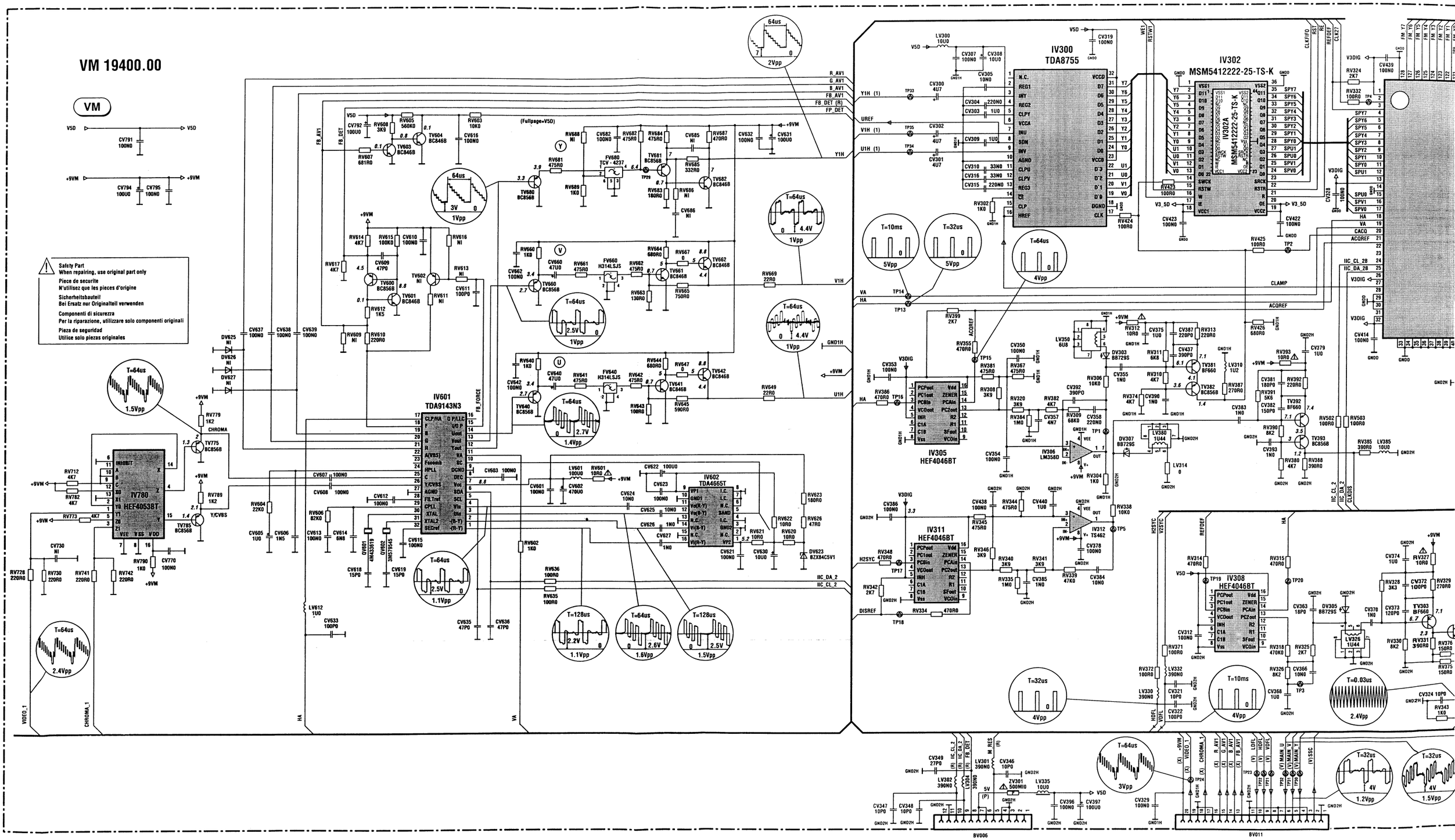

COMPONENT SIDE - COTE COMPOSANTS - BESTÜCKUNGSSEITE
LATO COMPONENTI - LADO COMPONENTES

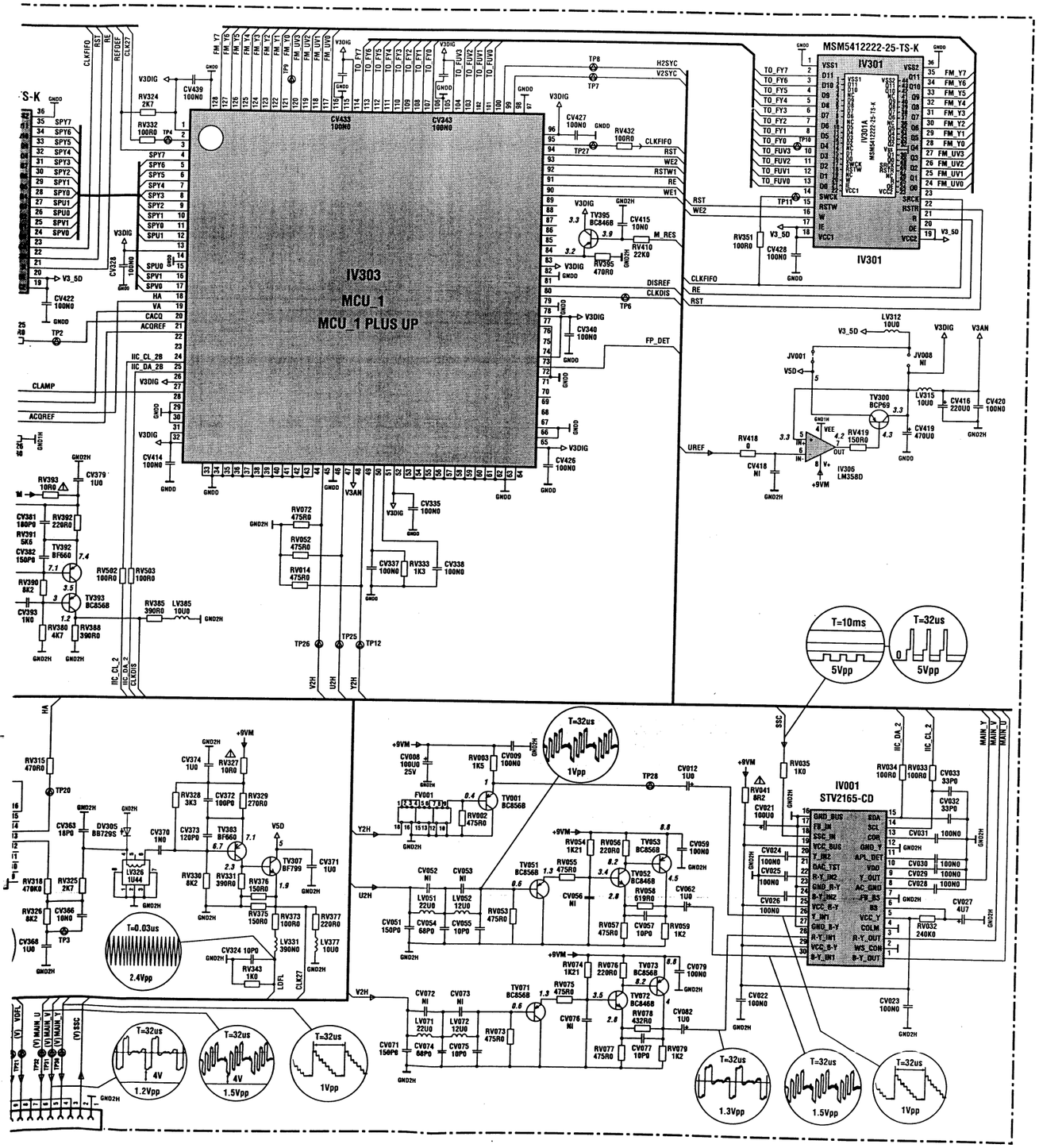

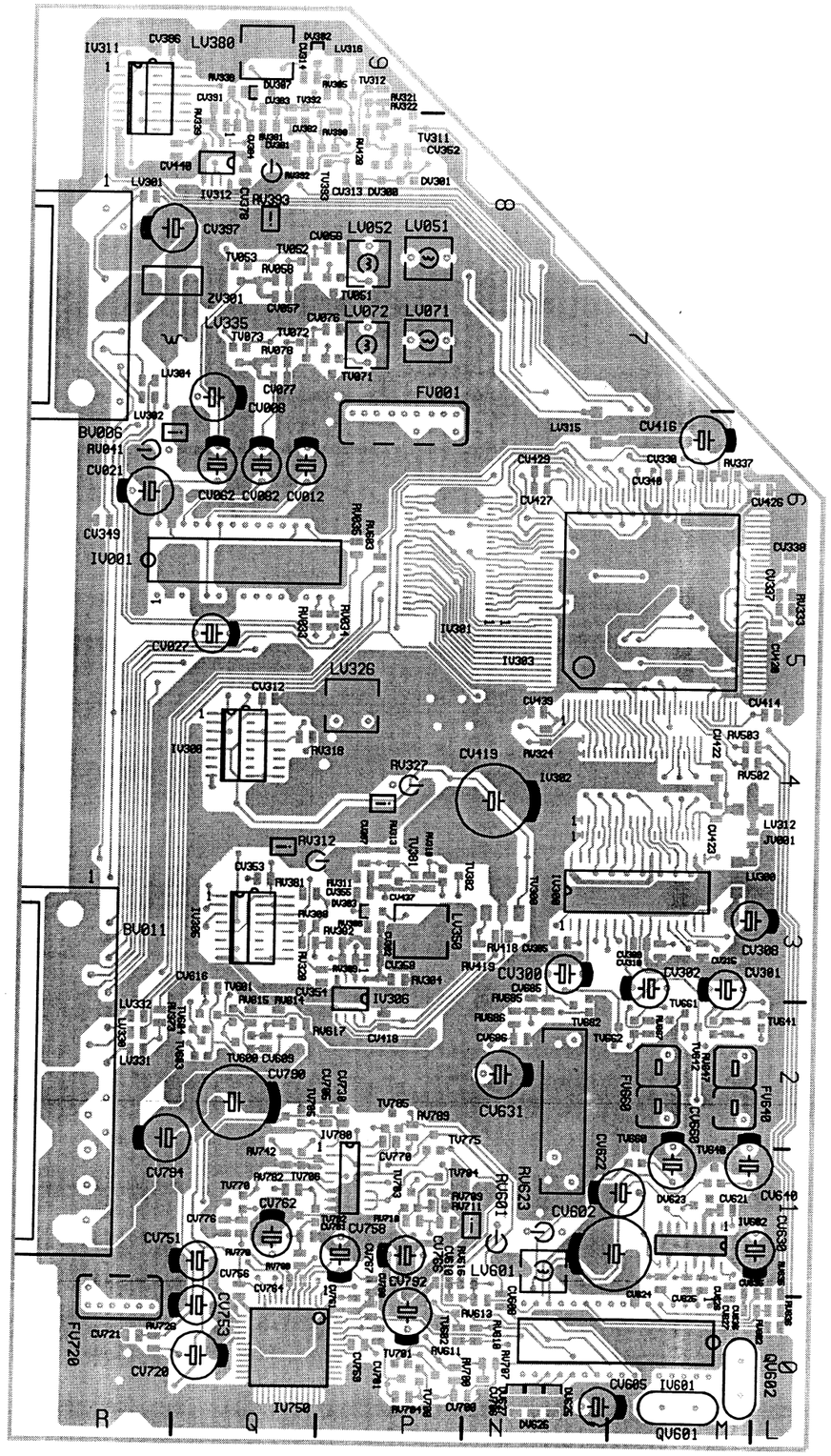

SOLDER SIDE - CÔTE SOUDURES - LÖTSEITE - LATO SALDATURE - LADO SOLDADURAS

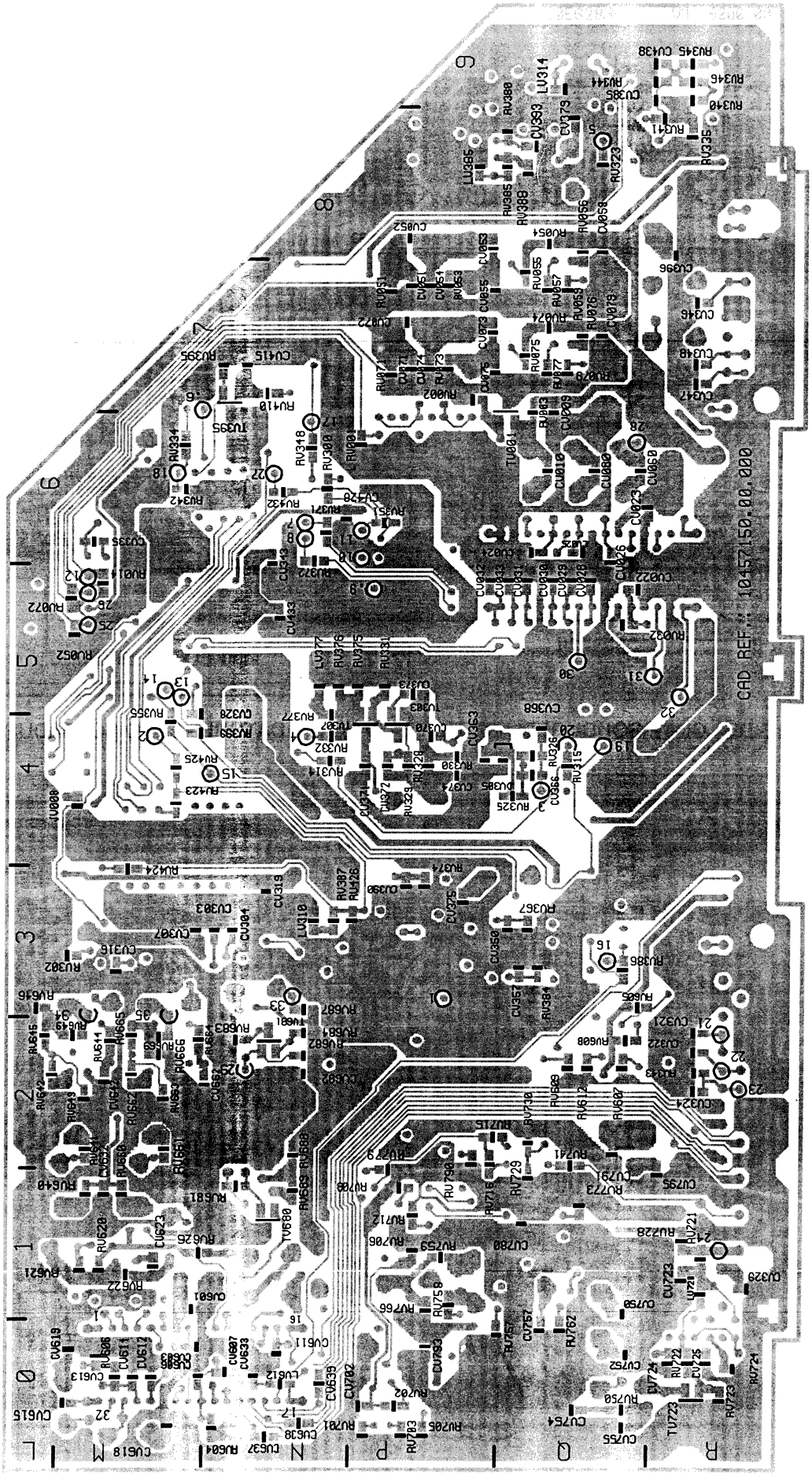

RP C19

COMPONENT SIDE - COTE COMPOSANTS - BESTÜCKUNGSSEITE
LATO COMPONENTI - LADO COMPONENTES

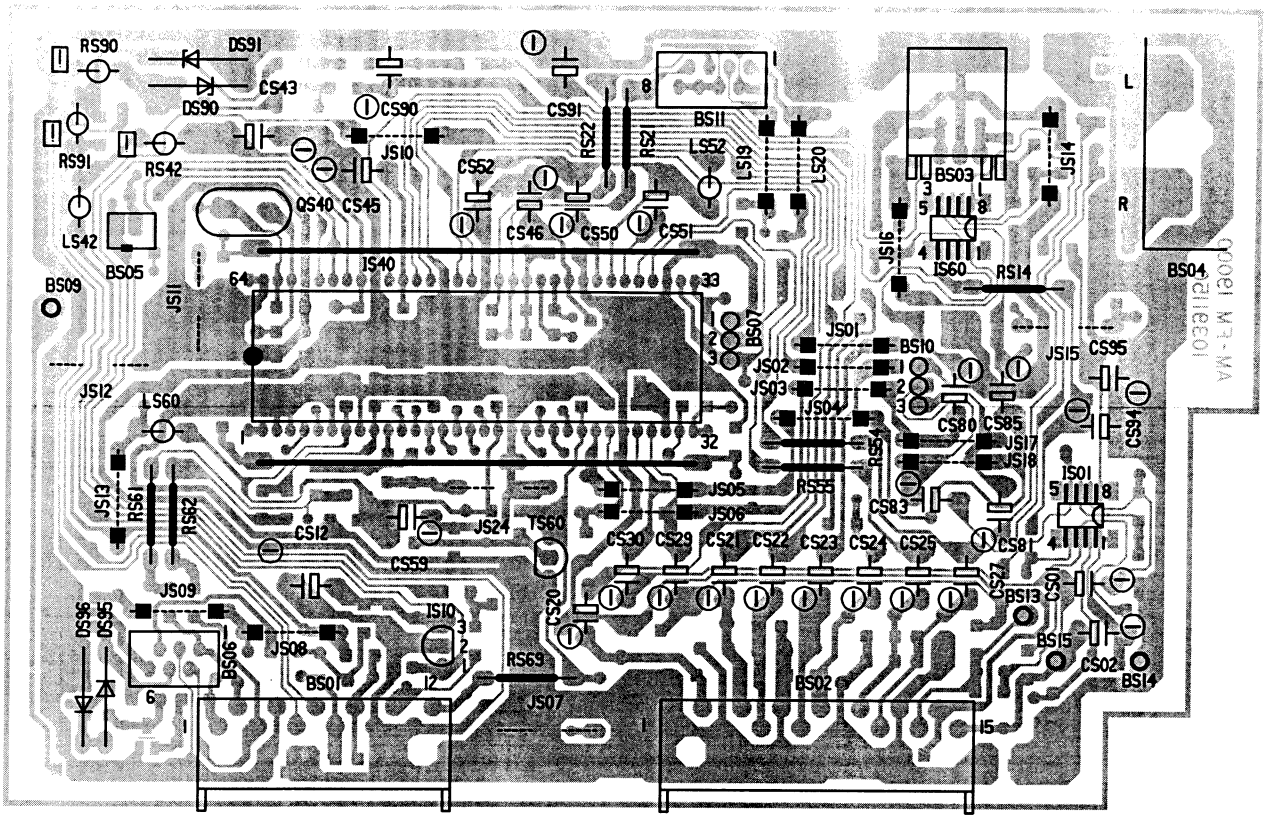

SOLDER SIDE - CÔTE SOUDURES - LÖTSEITE - LATO SALDATURE - LADO SOLDADURAS

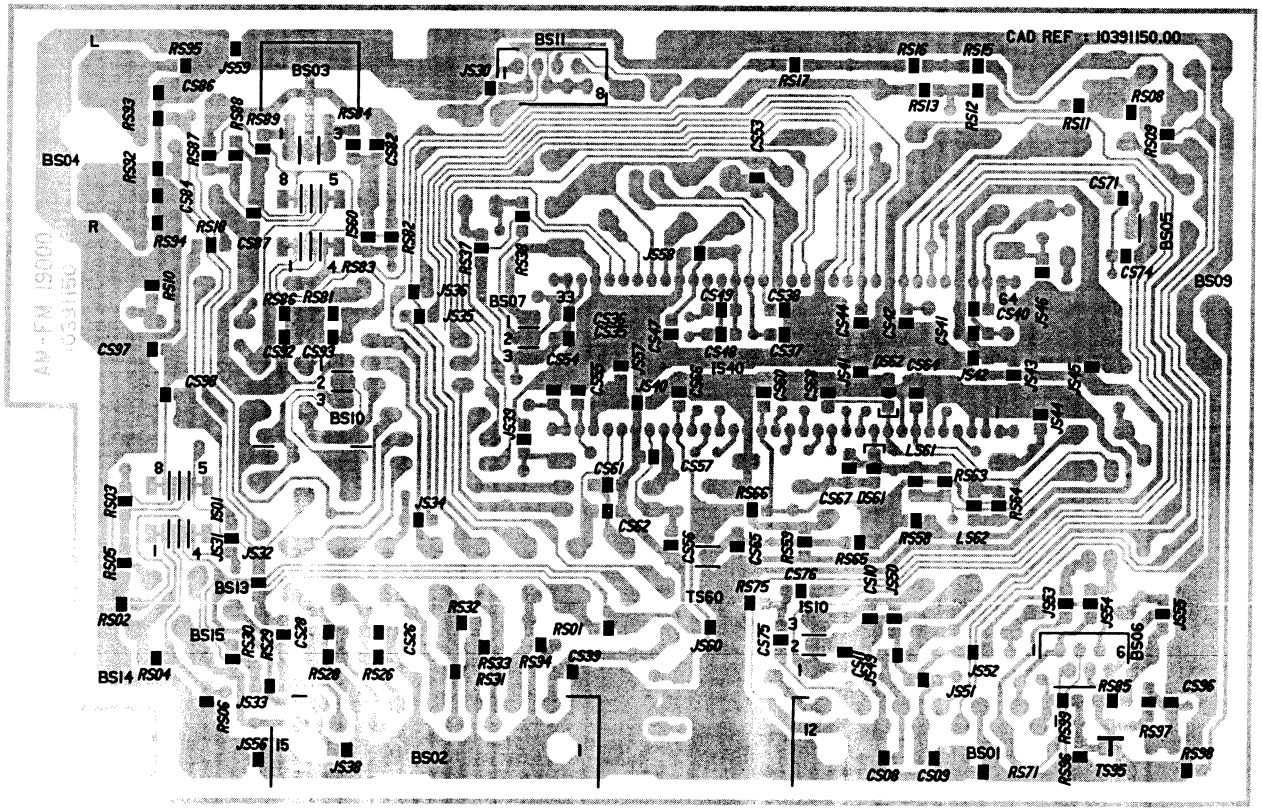

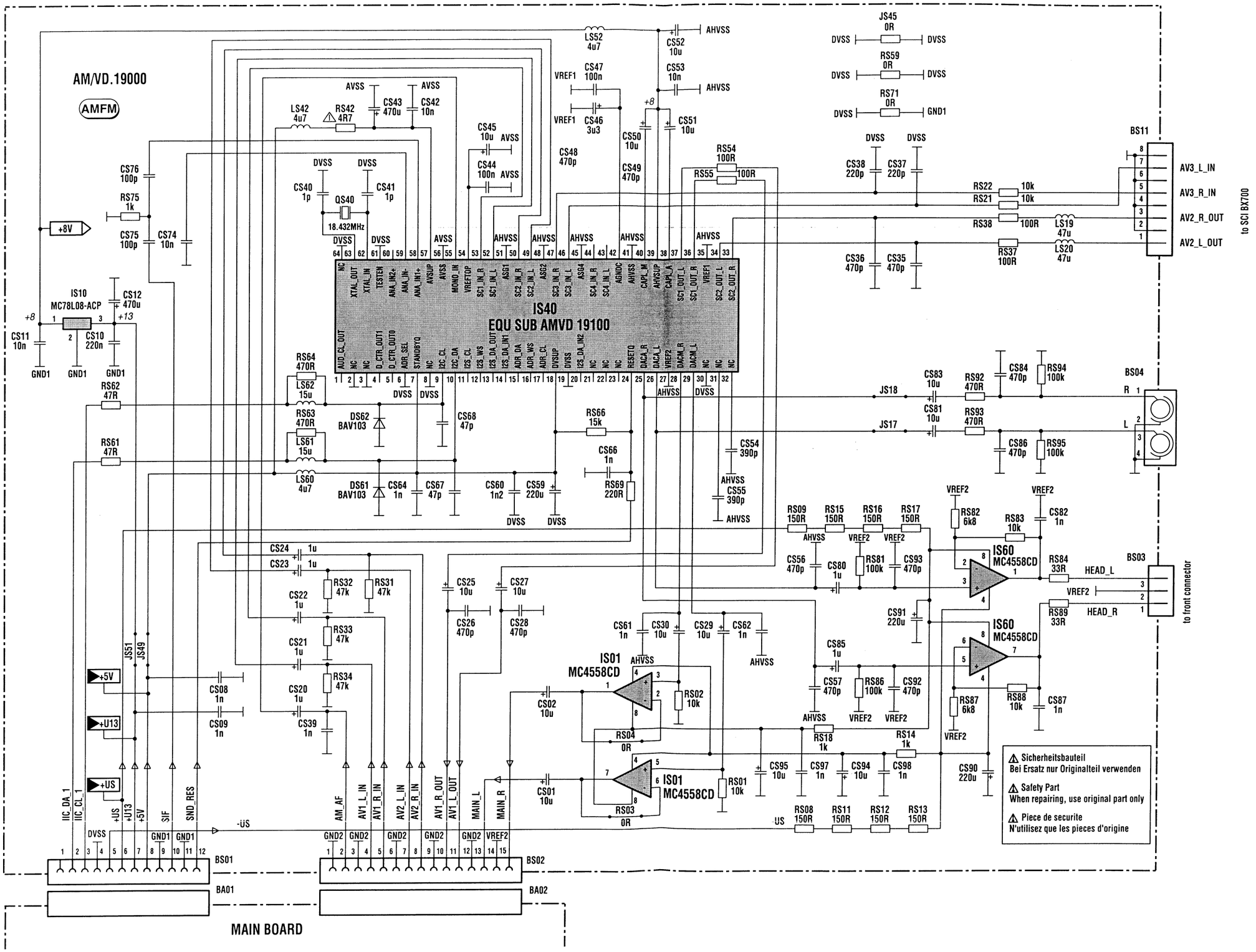
AM/VD.19000
AMFM
IS40
EQU SUB AMVD 19100
IS10
MC78L08-ACP
IS01
MC4558CD
IS60
MC4558CD
QS40
18.432MHz
DS62
BAV103
DS61
BAV103
+8V
+5V
+U13
+US
-US
AHVSS
DVSS
AVSS
VREF1
VREF2
GND1
GND2
BS11
BS04
BS03
BS01
BS02
BA01
BA02
AV3_L_IN
AV3_R_IN
AV2_R_OUT
AV2_L_OUT
to SCI BX700
HEAD_L
HEAD_R
to front connector
MAIN BOARD
Sicherheitsbauteil
Bei Ersatz nur Originalteil verwenden
Safety Part
When repairing, use original part only
Piece de securite
N'utilisez que les pieces d'origine

to SCI BX700

SUB AUDIO MODULE VIRTUAL DOLBY

SUB AMVD

SUB AMVD 19100 00

PINS of IC 64 ... 33

BS002

DGND 1 2 3 4 5 6 7 8 9 10 11 12 13 14 15 16 17 18 19 20 21 22 23 24 25 26 27 28 29 30 31 32

XTALIN XTALOUT ANAIN2+ ANAIN- ANAIN1+ +5VA MONOIN VREFTOP SC1INR SC1INL SC2INR SC2INL SC3INR SC3INL AGND SC4INR SC4INL AGNDC CAPLM +8V CAPLA SC1OUTL SC1OUTR SC2OUTL SC2OUTR

AGND

DGND

CS102 10N0

CS101 220N0

+8V

IS100 MSP3410D(DIE)

45 AHVSS 44 AGNDC 43 SC4INL 42 SC4INR 41 ASG3 40 SC3INL 39 SC3INR 38 ASG1 37 SC2INL 36 SC2INR 35 ASG0 34 SC1INL 33 SC1INR 32 VREFTOP 31 VREFTOP 30 MONOIN 29 AVSS 28 AVSS

46 AHVSS
47 CAPLM
48 AHVSUP
49 AVHSUP
50 CAPLA
51 SC1OUTL
52 SC1OUTR
53 VREF1
54 VREF1
55 SC2OUTL
56 SC2OUTR
57 ASG3
58 TESTNEU
59 DACMSUB
60 DACML
61 DACMR
62 VREF2
63 VREF2

27 AVSUP
26 AVSUP
25 ANAIN1+
24 ANAIN-
23 ANAIN2+
22 TESTEN
21 XTALIN
20 XTALOUT
19 DMACSYNC
18 AUDCLOUT
17 NP
16 NP
15 NP
14 DCTROUT1
13 DCTROUT0
12 ADRSEL
11 STANDBYQ
10 NP

65 DACAL 66 DACAR 67 RESETQ 68 I2SDAIN2 69 DVSS 70 DVSS 71 DVSUP 72 DVSUP 1 ADRCL 2 ADRWS 3 NP 4 ADRDA 5 I2SDAIN1 6 I2SDAOU1 7 I2SWS 8 I2SCL 9 I2CDA I2CCL

AGND

CS106 1N0

+5VD

CS103 1N0

CS104 10N0

CS105 100N0

DGND +5VD

PINS of IC

ADRSEL I2CCL I2CDA +5VD DGND RESETQ DACAR DACAL DACMR DACML

1 2 3 4 5 6 7 8 9 10 11 12 13 14 15 16 17 18 19 20 21 22 23 24 25 26 27 28 29 30 31 32

1 BS001 32

DGND

CS206 10U0

CS207 100N0

TP2 TP1

DGND

CS202 10N0

IS200 DPL3518(DIE)

43 AHVSS 42 AHVSS 41 AGNDC 40 SC3INL 39 SC3INR 38 ASG2 37 SC2INL 36 SC2INR 35 ASG1 34 SC1INL 33 SC1INR 32 VREFTOP 31 VREFTOP 30 MONOIN 29 AVSS 28 AVSS 27 AVSUP

44 CAPLC1
45 AHVSUP
46 AHVSUP
47 CAPLC2
48 SC1OUTL
49 SC1OUTR
50 VREF1
51 VREF1
52 SC2OUTL
53 SC2OUTR
54 ASG3
55 DACC1L
56 DACC1R
57 VREF2
58 VREF2
59 DACC2L
60 DACC2R

26 AVSUP
25 NC
24 NC
23 NC
22 TESTEN
21 XTALIN
20 XTALOUT
19 DCTRIN
18 AUDCLOUT
17 NP
16 NP
15 NP
14 DCTRIO1
13 DCTRIO0
12 ADRSEL
11 STANDBYQ
10 NP

+5VA

AGND

+5VD

61 RESETQ 62 I2SDAOU2 63 I2SDAIN2 64 DVSS 65 DVSS 66 DVSUP 67 DVSUP 68 NP 1 NC 2 NC 3 NC 4 I2SDAIN1 5 I2SDAOU1 6 I2SWS 7 I2SCL 8 I2CDA 9 I2CCL

CS203 1N0

CS204 10N0

CS205 100N0

DGND +5VD

DIGITAL CONVERGENCE UNIT - PLATINE DE CONVERGENCES NUMERIQUES - DIGITALE KONVERGENZ EINHEIT - UNITÀ DI CONVERGENZA DIGITALE - UNIDAD DE CONVERGENCIA DIGITAL

DCU.RP19.00

DCU

CONVERGENCE GENERATOR

SCHIELDING

IK01 STV2040

IK02 TL084/CP

IK03 TL084/CP

IP02 TL084/CP

IK04 MC7812/CT

IK05 MC7805/CT

IK06 L7912CV

IK07 M24C32BN1

IK08 X24164

IK15 X24164

FILTER AND OUTPUT AMPLIFIER

PIN AND KEY PRE-CORRECTION

GRID PATTERN INSERTING

SUPPLY WATCH DOG

TO CONVERGENCE POWER AMPLIFIER

IA10 TL082CD

IG11 TL082CD

RV

GV

RH

GH

CONVERGENCE

ICC19 CHASSIS MAIN BOARD

POWER AMPLIFIER

TXT MODULE

Note : The form of signals D R/G/B, RV,RH,GH,GV,BH and BV is given for information only. They may vary with the convergence settings and the synchronisation of the oscilloscope.

Note : La forme des signaux D R/G/B, RV,RH,GH,GV,BH et BV est donnée à titre indicatif. Elle peut varier avec les réglages de convergence et la synchronisation de l'oscilloscope.

Hinweis : Die Form der Signale D R/G/B, RV, RH, GH, BH und BV ist nur informativ. Sie können je nach Einstellung der Konvergenz und der Synchronisation des Oszilloskops abweichen.

Nota : La forma dei segnali D R/G/B, RV, RH, GH, GV, BH e BV viene fornita solo a titolo indicativo. La forma può variare in base alle regolazioni di convergenza e alla sincronizzazione dell'oscilloscopio.

Nota : La forma de las señales D R/G/B, RV, RH, GH, GV, BH Y BV se facilita únicamente para información. Puede diferir con los parámetros de convergencia y la sincronización del osciloscopio.

DCU.RP19.00

DCU

GV

CONVERGENCE POWER AMPLIFIER

BV

DEFLECTION SPLITTER

S&H PULSE FORMER

CONTRAST REDUCING BEAM - SPOT - LIMITER

GH

BH

DIGITAL CONVERGENCE UNIT - PLATINE DE CONVERGENCES NUMERIQUES - DIGITALE KONVERGENZ EINHEIT - UNITÀ DI CONVERGENZA DIGITALE - UNIDAD DE CONVERGENCIA DIGITAL

COMPONENT SIDE - COTE COMPOSANTS - BESTÜCKUNGSSEITE - LATO COMPONENTI - LADO COMPONENTES

SOLDER SIDE

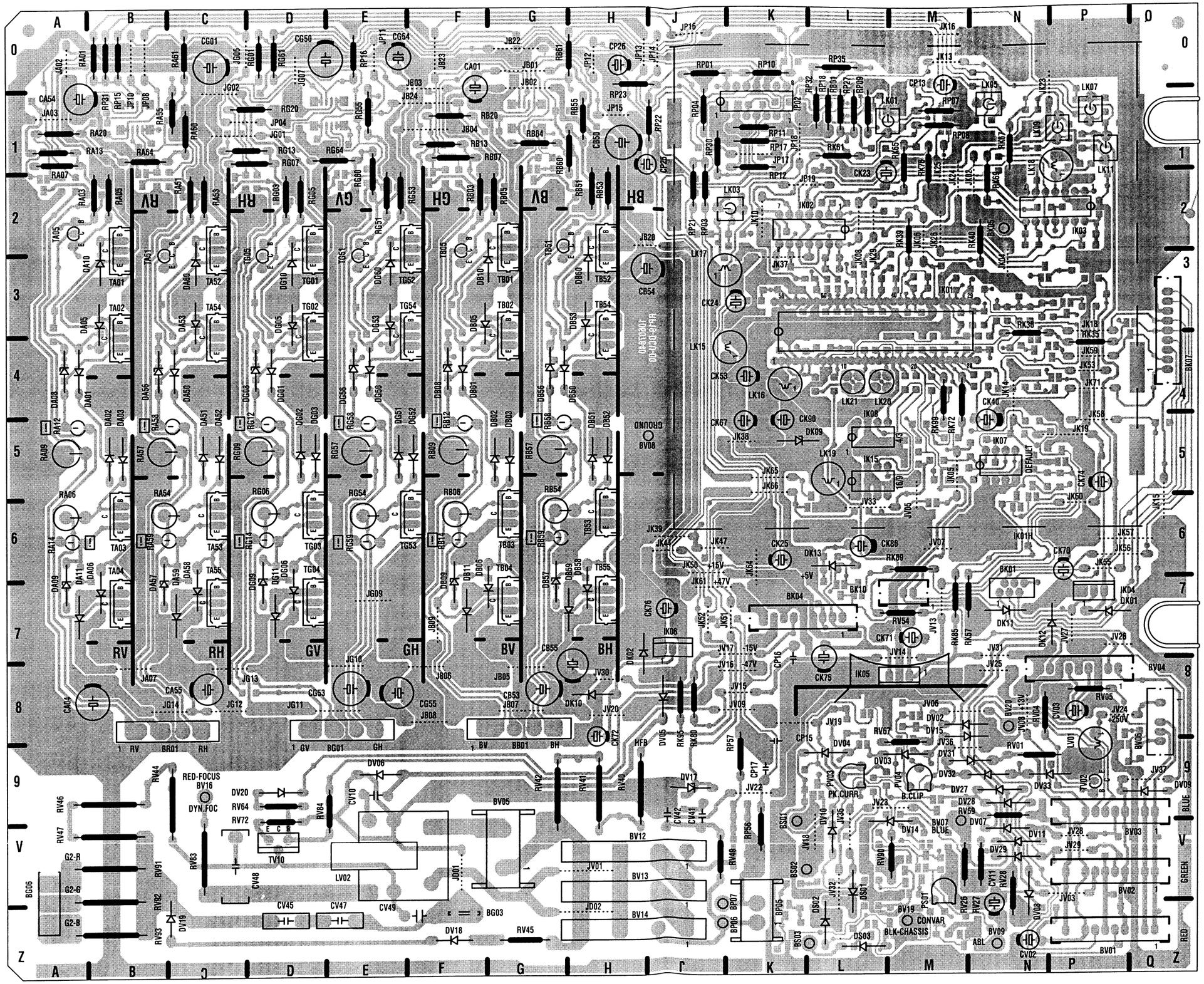

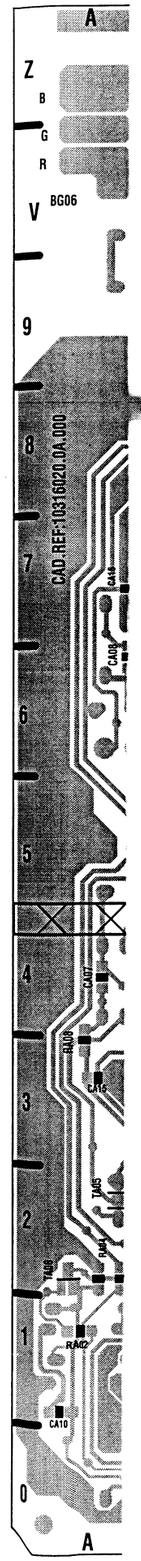

SOLDER SIDE - CÔTE SOUDURES - LÖTSEITE - LATO SALDATURE - LADO SOLDADURAS

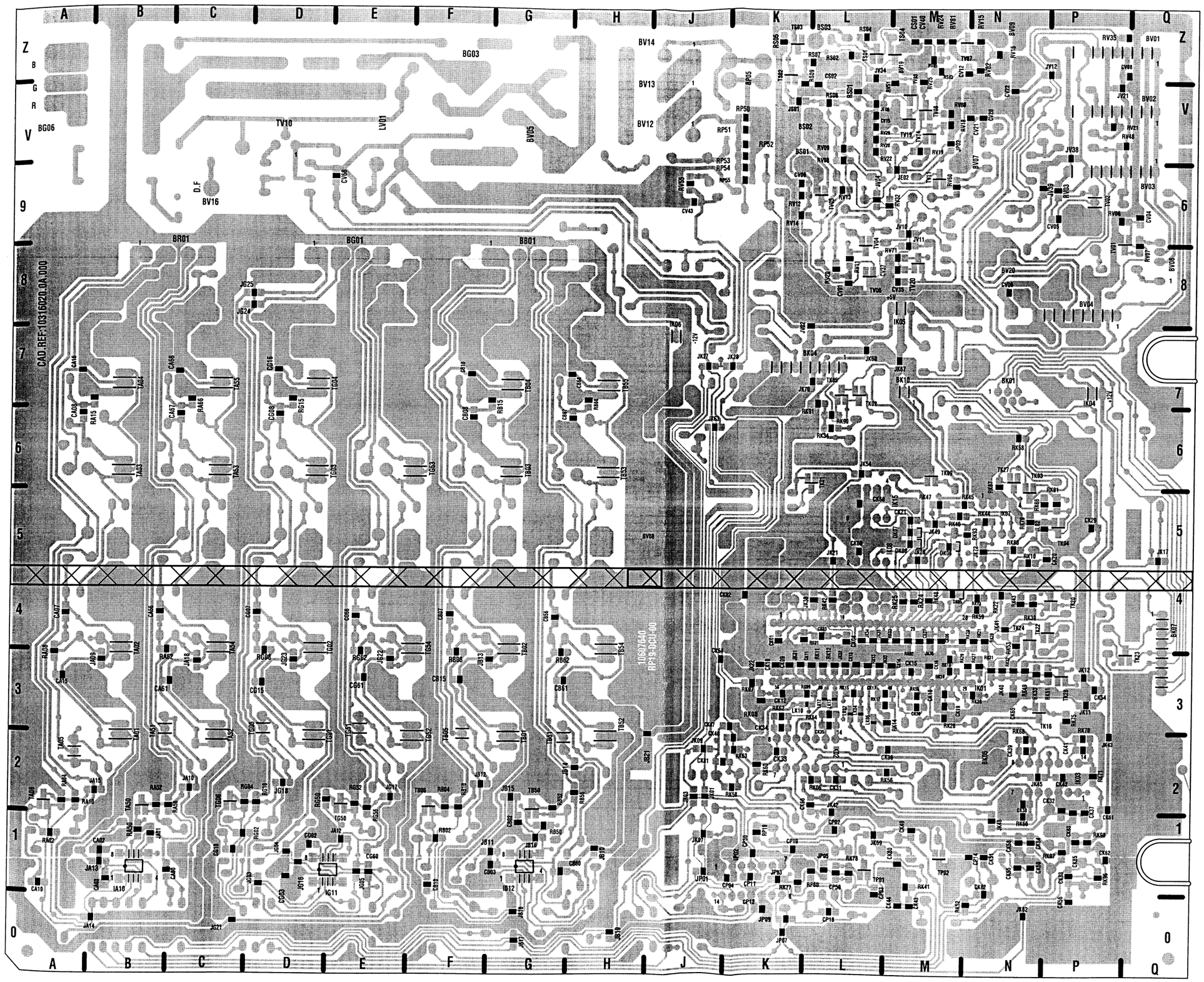

PICTURE IN PICTURE - MODULE IMAGE DANS L'IMAGE - BILD IM BILD BAUSTEIN - MODULO IMMAGINE NELL' IMMAGINE - MODULO IMAGEN EN IMAGEN

DTP.19510

PIP

TDA 8601 LOGIC

PINS(I/O)	O/P
HIGH	TEXT/OSD
LOW	PIP

⚠ Sicherheitsbauteil
Bei Ersatz nur Originalteil verwenden

⚠ Piece de securite
N'utilisez que les pieces d'origine

⚠ Safety Part
When repairing, use original part only

COMPONENT SIDE - COTE COMPOSANT
LATO COMPONENTI - LADO C

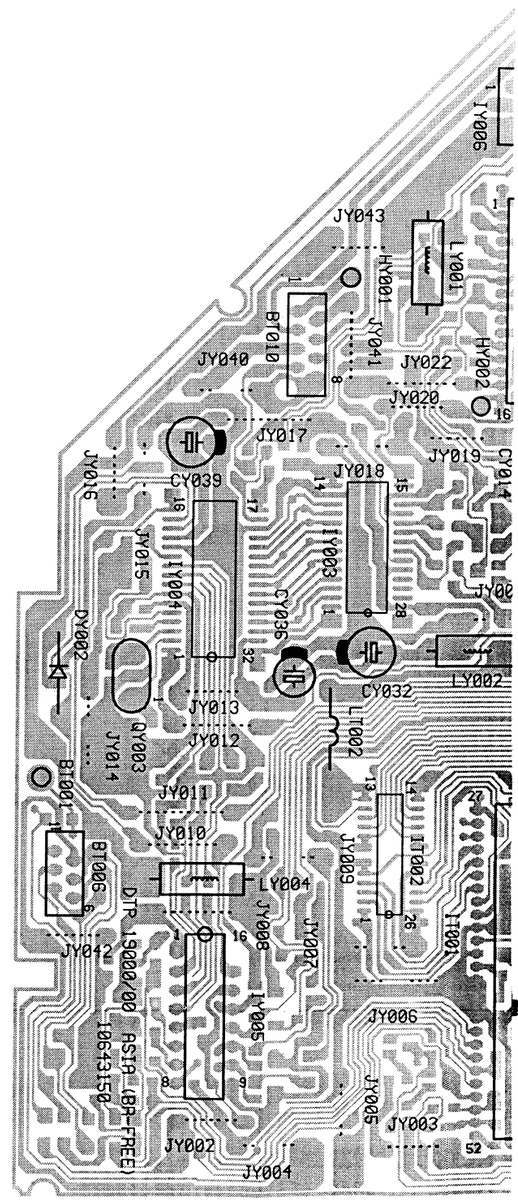

ENT SIDE - COTE COMPOSANTS - BESTÜCKUNGSSEITE
LATO COMPONENTI - LADO COMPONENTES

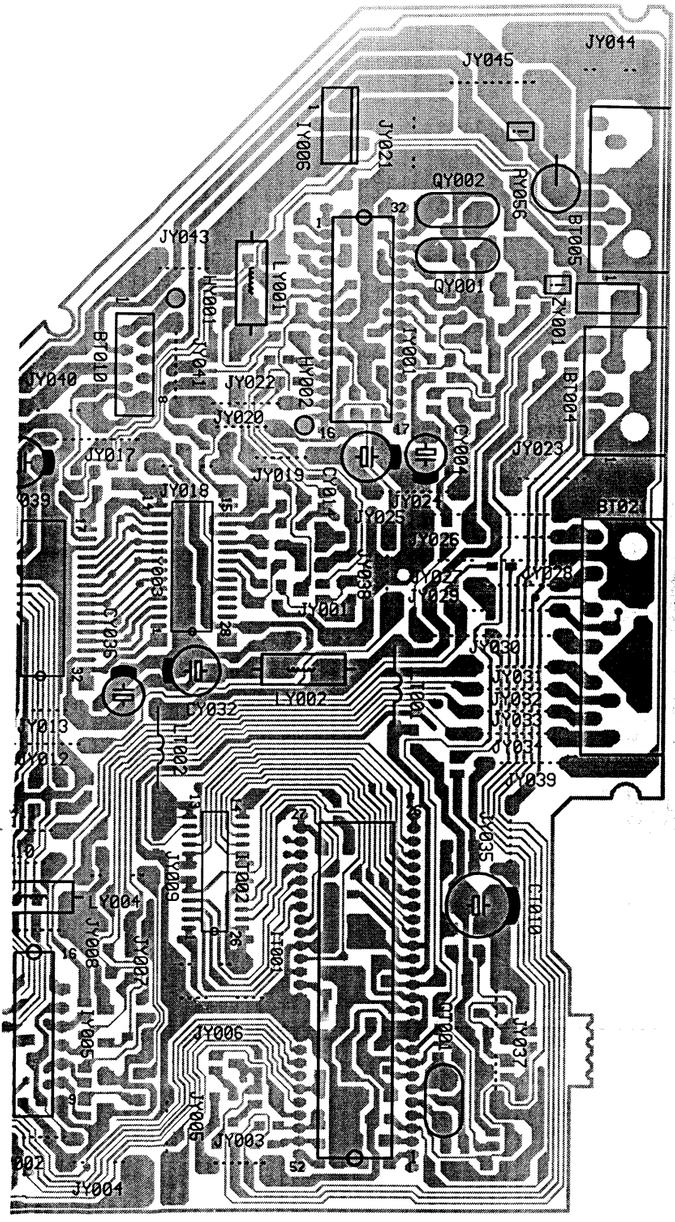

SOLDER SIDE - CÔTE SOUDURES - LÖTSEITE - LATO SALDATURE - LADO SOLDADURAS

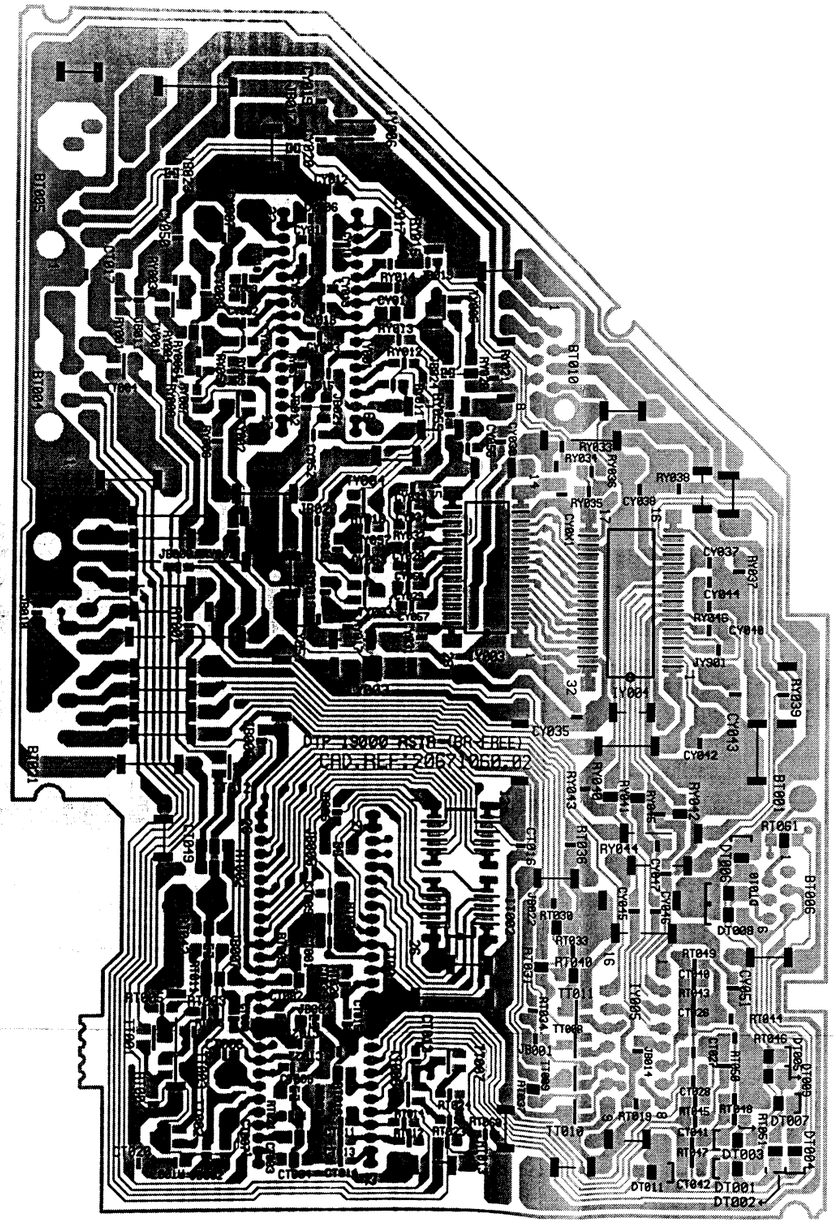

COMPONENT SIDE - COTE COMPOSANTS - BESTÜCKUNGSSEITE
LATO COMPONENTI - LADO COMPONENTES

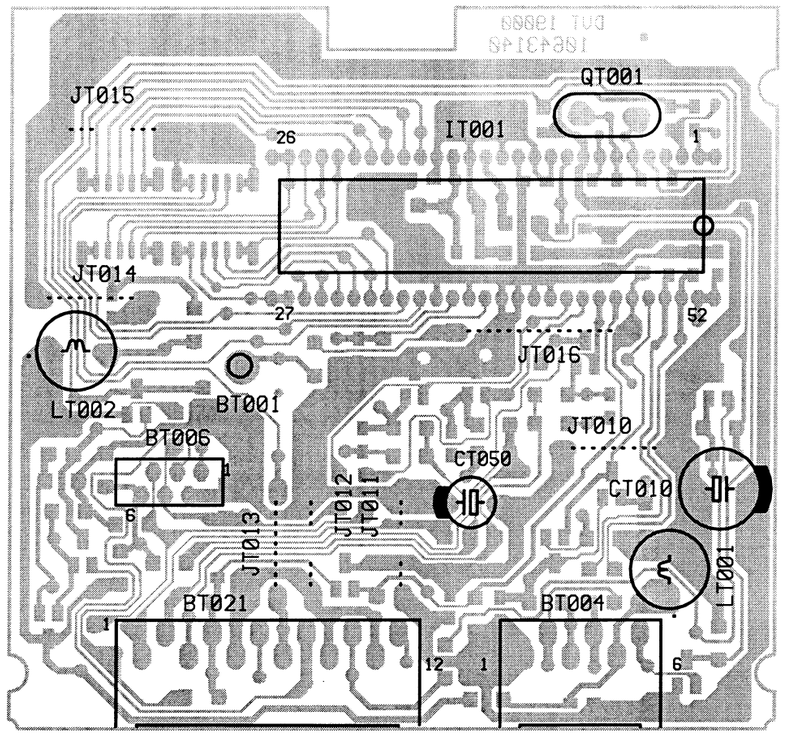

SOLDER SIDE - CÔTE SOUDURES - LÖTSEITE - LATO SALDATURE - LADO SOLDADURAS

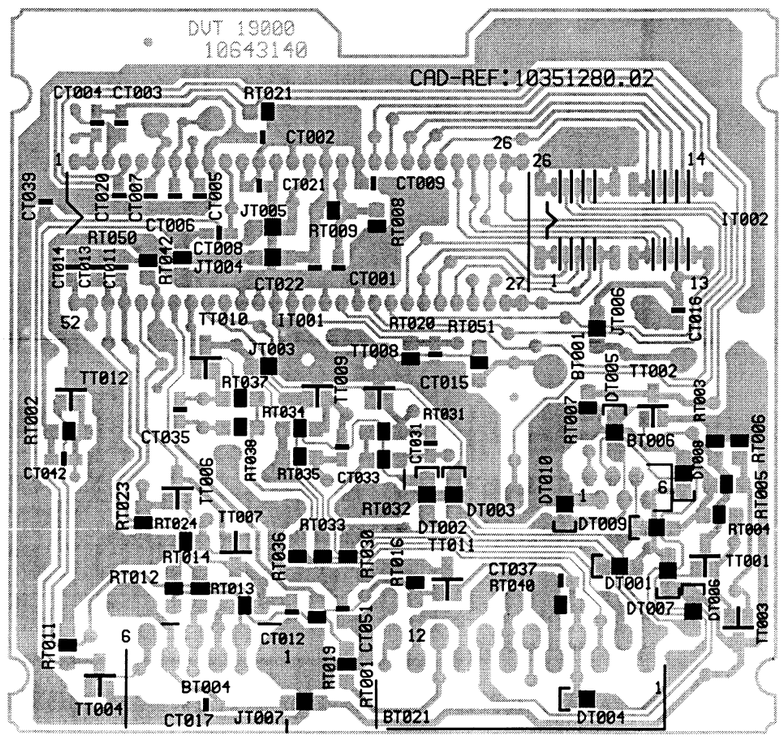

TELETEXT MODULE - MODULE TELETEXTE - VIDEOTEXT MODUL - MODULO TELEVIDEO - MÓDULO TELETEXTO

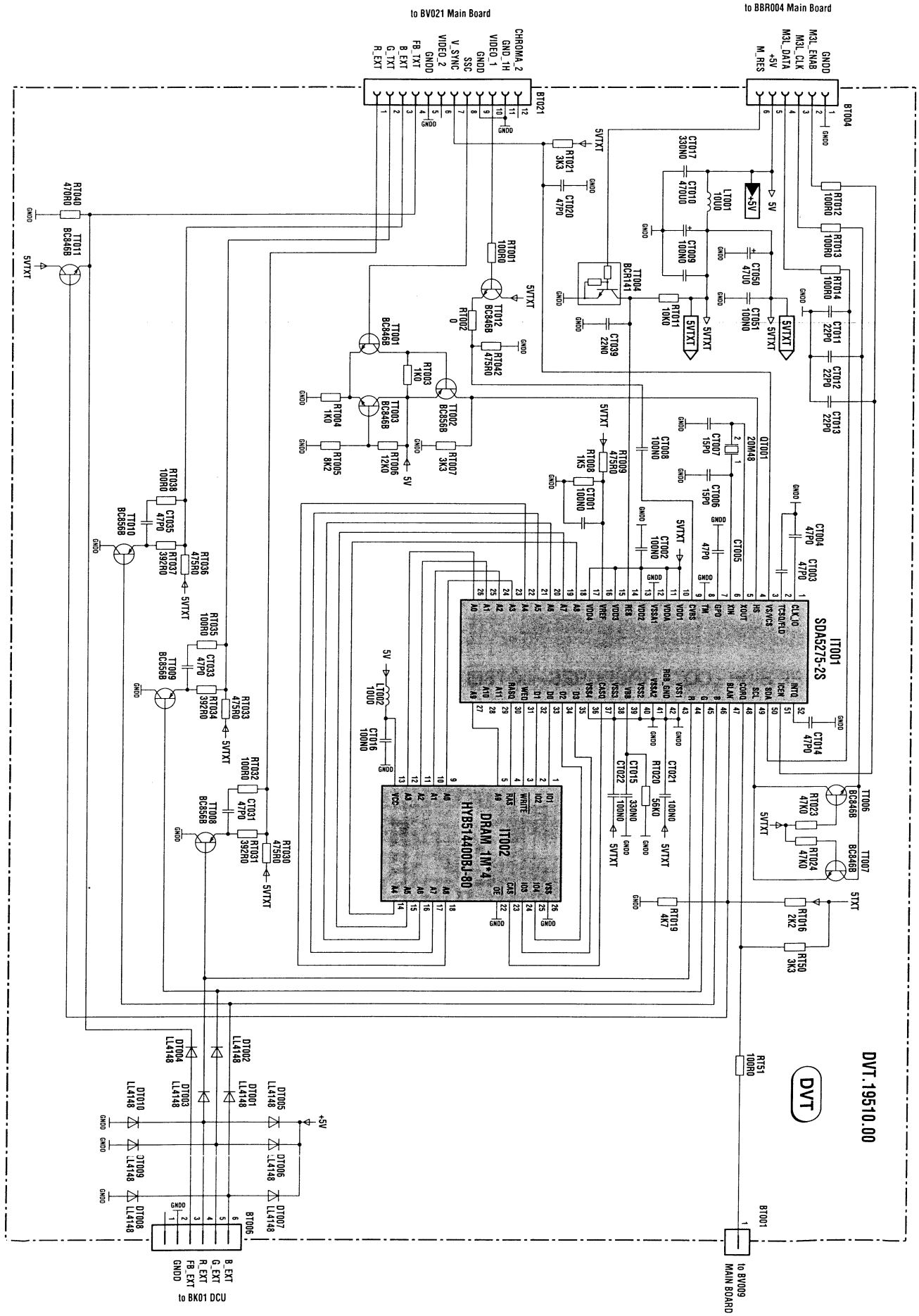

RF - IF PART PIP - FEP 19100

COMPONENT SIDE - CÔTE COMPOSANTS - BESTÜCKUNGSSEITE - LATO COMPONENTI - LADO COMPONENTES

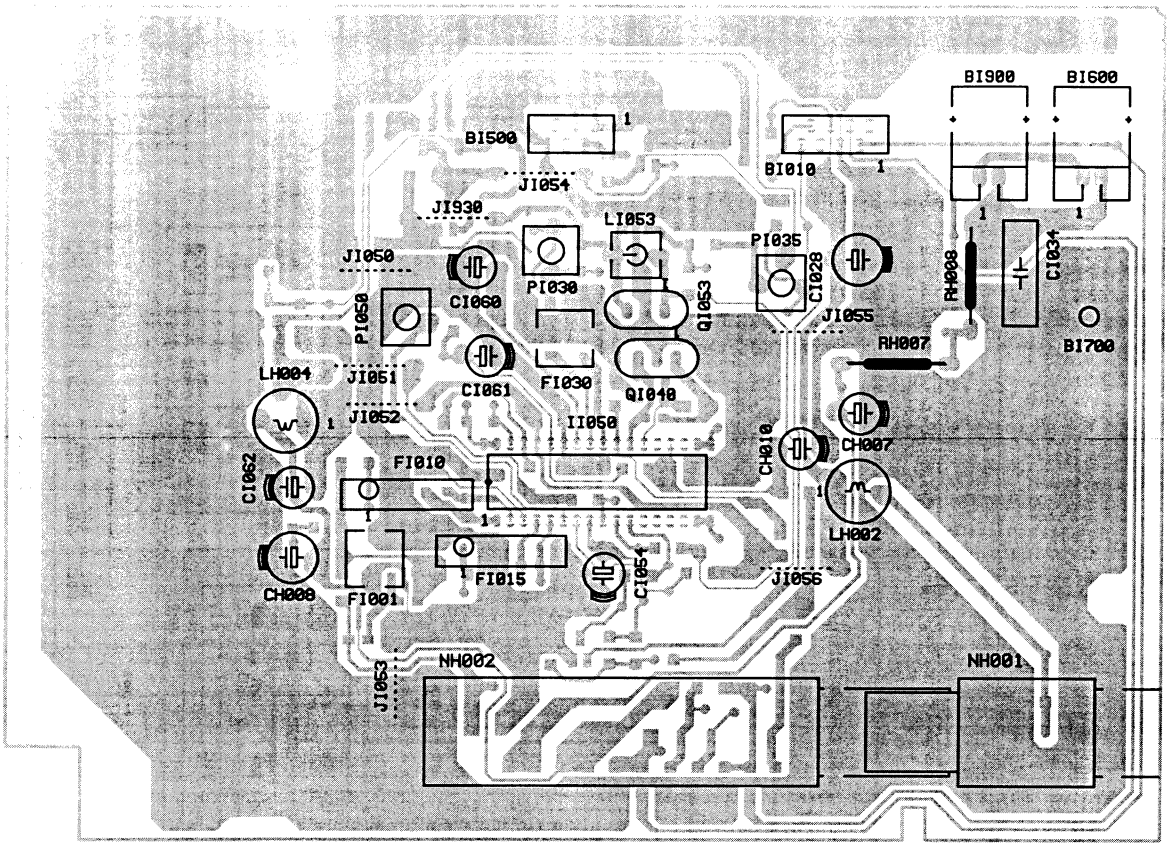

SOLDER SIDE - CÔTE SOUDURES - LÖTSEITE - LATO SALDATURE - LADO SOLDADURAS

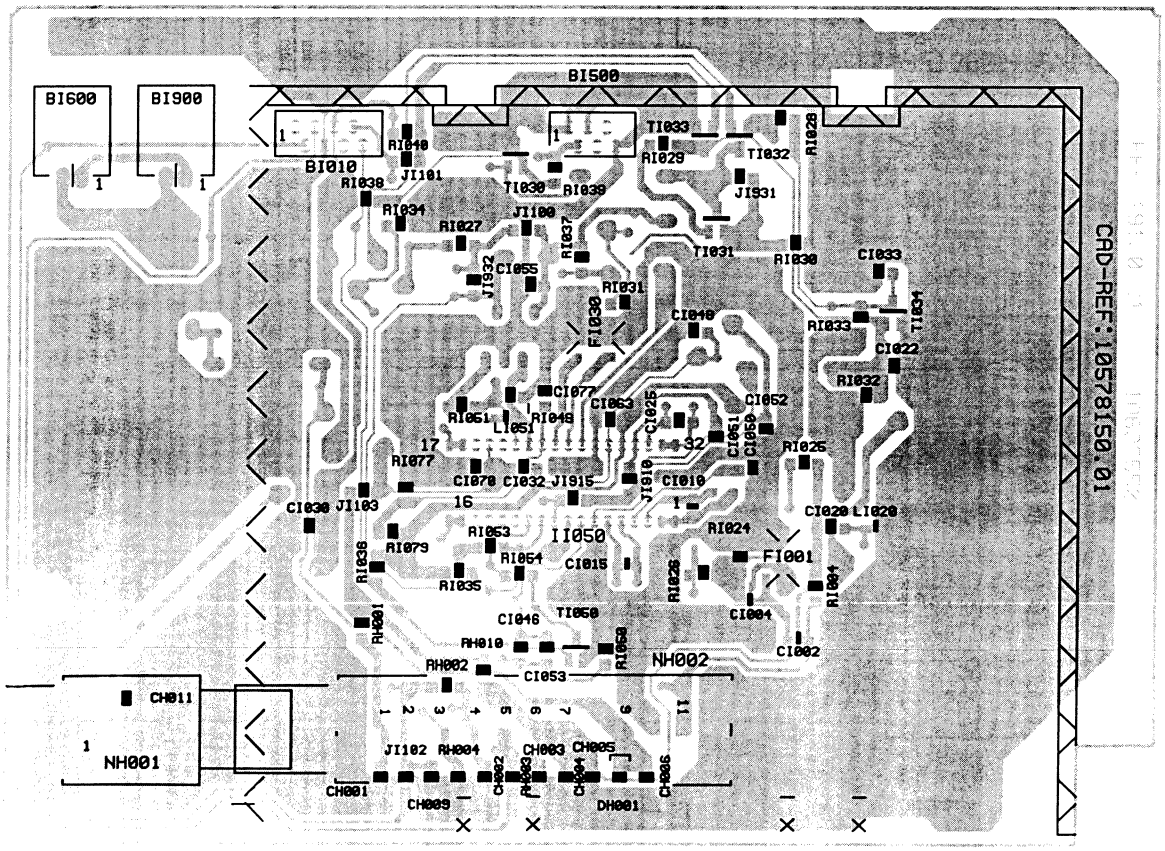

FEP.19100.00

FEP

NH001

NH002
CTT 5010

ANT.IN
TV OUT
POWER SPLITTER
+5V GND

AGC NC AS CL DA +5V NC +30V NC IF

CH011 100N0
LH002 10U0
CH001 1N0
RH001 1K0
CH010 22U0
CH003 22P0
CH002 22P0
RH002 2K7
RH003 100R0
RH010 15K0
CH009 47P0
RH004 0
CH005 100N0
CH008 470U0
LH004 10U0
CH006 1N0
CH007 4U7
DH001 ZMM33
RH007 12K0
RH008 12K0
RI004 0
LI020 0
CI020 18P0
RI026 47R0
RI024 1K0

LI051 6U8
QI040 5M74
RI051 180R0
CI063 4N7
CI062 47U0
CI032 1U0
RI079 22K0
RI077 22K0
CI077 4N7
CI070 4N7
RI049 4K7
CI051 0
CI025 10N0
CI061 2U2
CI048 680N0
CI060 2U2
FI030
GND_IF

II050
TDA9811/N3
VI SIF VI SIF INSW1 Vp CVAGC GND CHP2 VCO2 VCO1 AFC VI Vid Vo Vid Vo CSS TAGC n.c. Mode
VI VIF VI VIF CBL VI VIF VI VIF TAD1 TPLL CSAGC STD Vo CVBS SW1 Vo AF n.c. n.c. n.c. n.c.

RI054 3K3
TI050 BCR141
CI050 100N0
FI015 OFWK3953M
CI015 4P7
CI046 100N0
CI053 100N0
RI050 330R0
PI050 22K0
CI052 4N7
JI915 0
RI053 220R0
JI932 0
CI055 39P0
JI930
JI931 0
RI035 4K7
CI030 10N0
RI038 1K0
RI039 10R0
TI030 BC856B
CI022 4N7
0 (Mod. Pos)
5 (Mod. Neg)
TI033 BCR141
RI032 1K0
6.6 (Mod. Pos)
0.1 (Mod. Neg)

BI500 To "SAT" SCI
6 GND
5
4
3 GND
2 CVBS
1 GND

PAL
T = 64µs
3Vpp-H
SECAM
T = 64µs
3Vpp-H

BI600 To BL052 Main Board
2
1

BI010 To BT010 DTP19010
1
2 I2C DA
3 I2C CLK
4 GND
5 +5V
6
7 OPA
8 OPB

CI028 100U0

L'
NORM

⚠ Sicherheitsbauteil
Bei Ersatz nur Originalteil verwenden
⚠ Safety Part
When repairing, use original part only
⚠ Piece de securite
N'utilisez que les pieces d'origine

Variant BG/I/DKK'/L/L'	NORM OPA	L' OPB
BG/I DK/K'	L	L
L	H	L
L'	H	H

SCART INTERFACE MODULE - MODULE INTERFACE PERITELEVISION - SCART INTERFACE - MODULO PRESA PERITEL - MODULO EUROTOMA

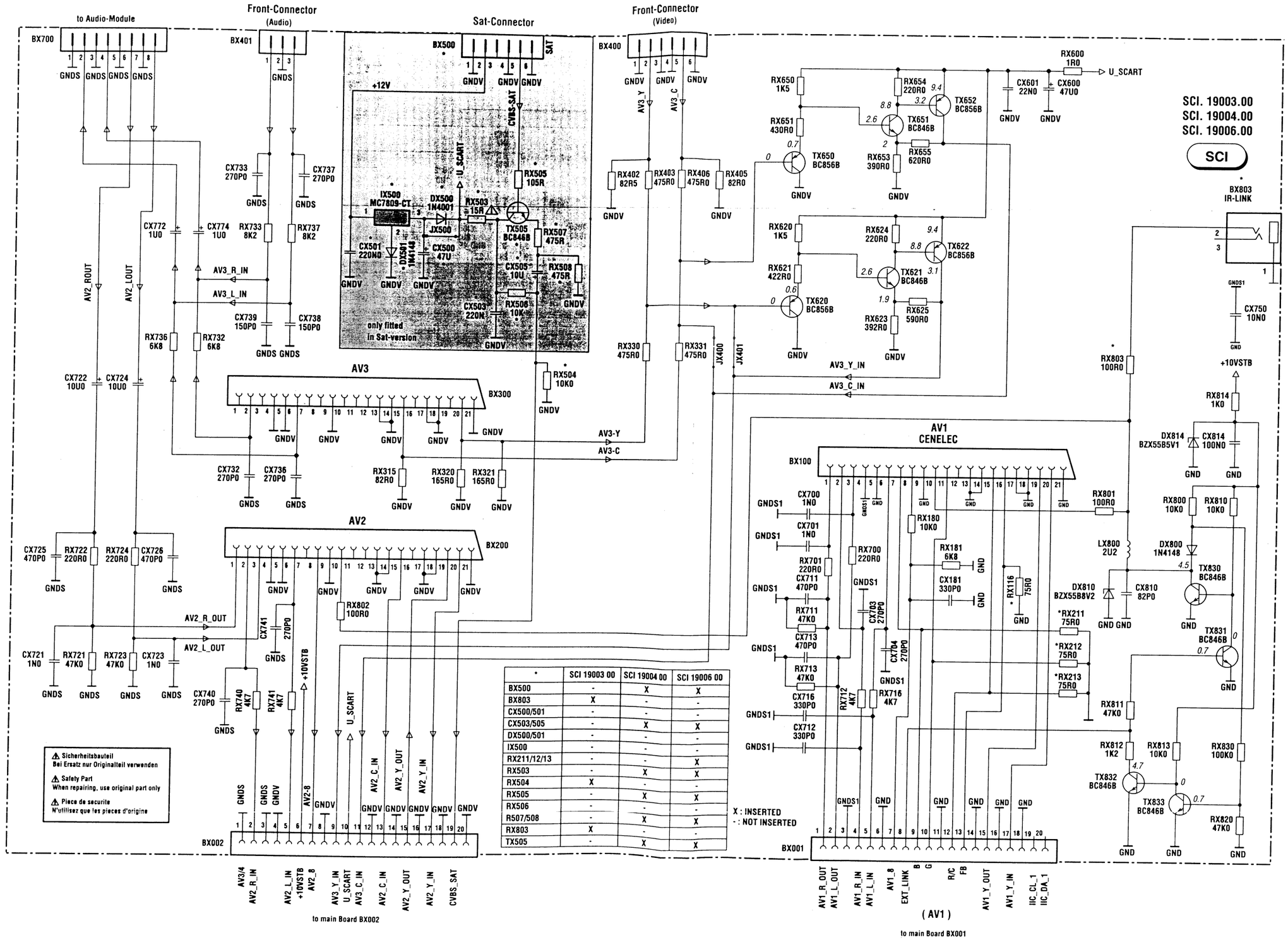

*	SCI 19003 00	SCI 19004 00	SCI 19006 00
BX500	-	X	X
BX803	X	-	-
CX500/501	-	-	-
CX503/505	-	X	X
DX500/501	-	-	-
IX500	-	-	-
RX211/12/13	-	-	X
RX503	-	X	X
RX504	X	-	-
RX505	-	X	X
RX506	-	-	-
R507/508	-	X	X
RX803	X	-	-
TX505	-	X	X

X : INSERTED
- : NOT INSERTED

⚠ Sicherheitsbauteil
Bei Ersatz nur Originalteil verwenden

⚠ Safety Part
When repairing, use original part only

⚠ Piece de securite
N'utilisez que les pieces d'origine

COMPONENT SIDE - COTE COMPOSANTS - BESTÜCKUNGSSEITE
LATO COMPONENTI - LADO COMPONENTES

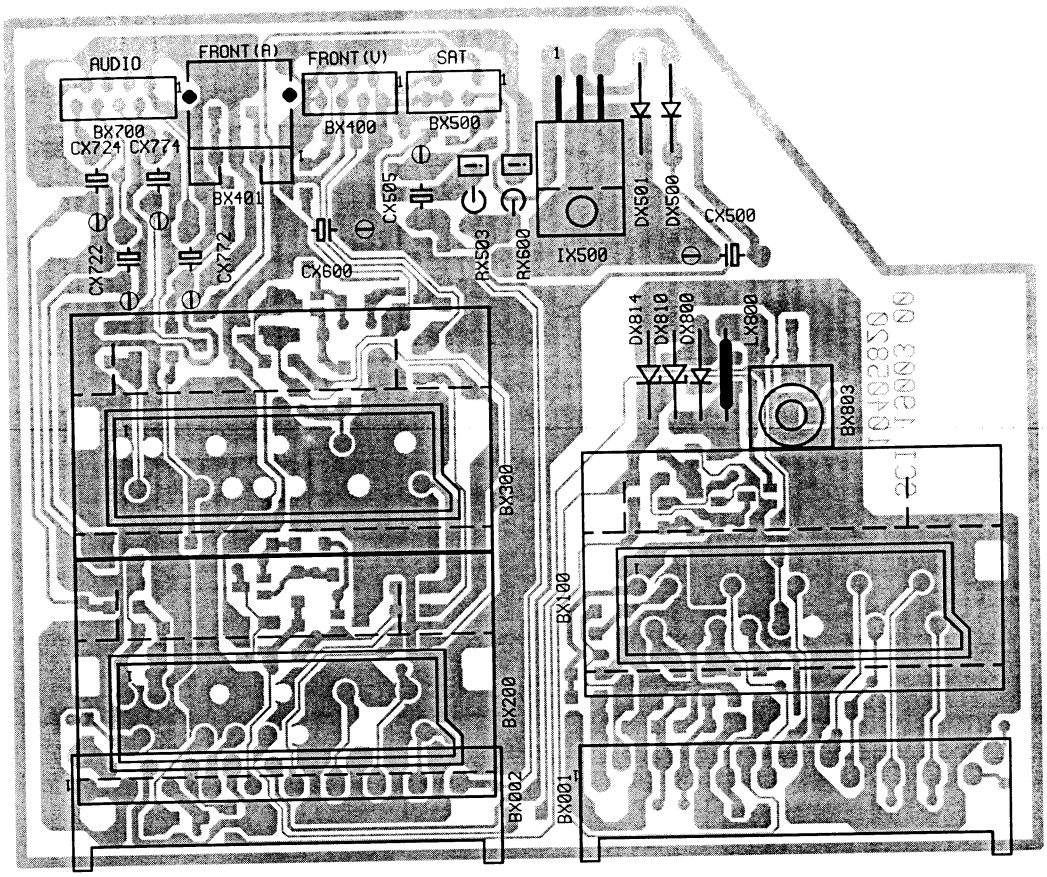

SOLDER SIDE - CÔTE SOUDURES - LÖTSEITE - LATO SALDATURE - LADO SOLDADURAS

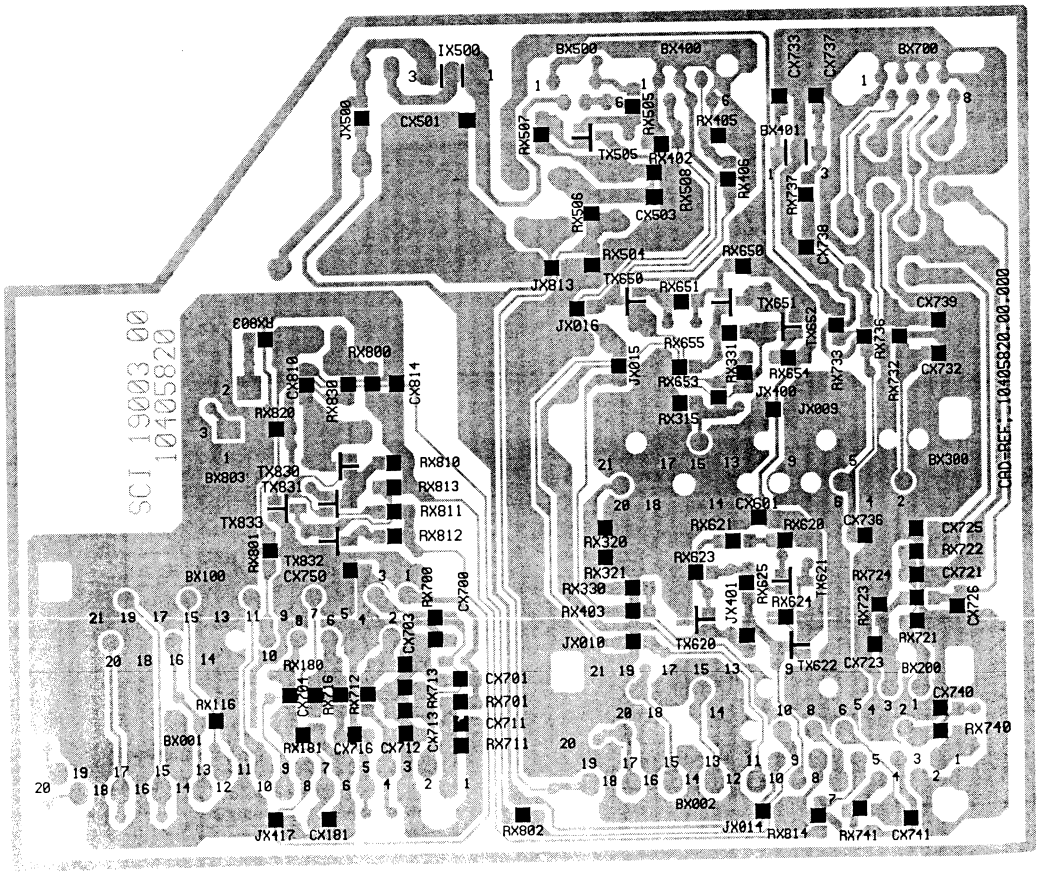

PS RP19 01

COMPONENT SIDE - COTE COMPOSANTS - BESTÜCKUNGSSEITE
LATO COMPONENTI - LADO COMPONENTES

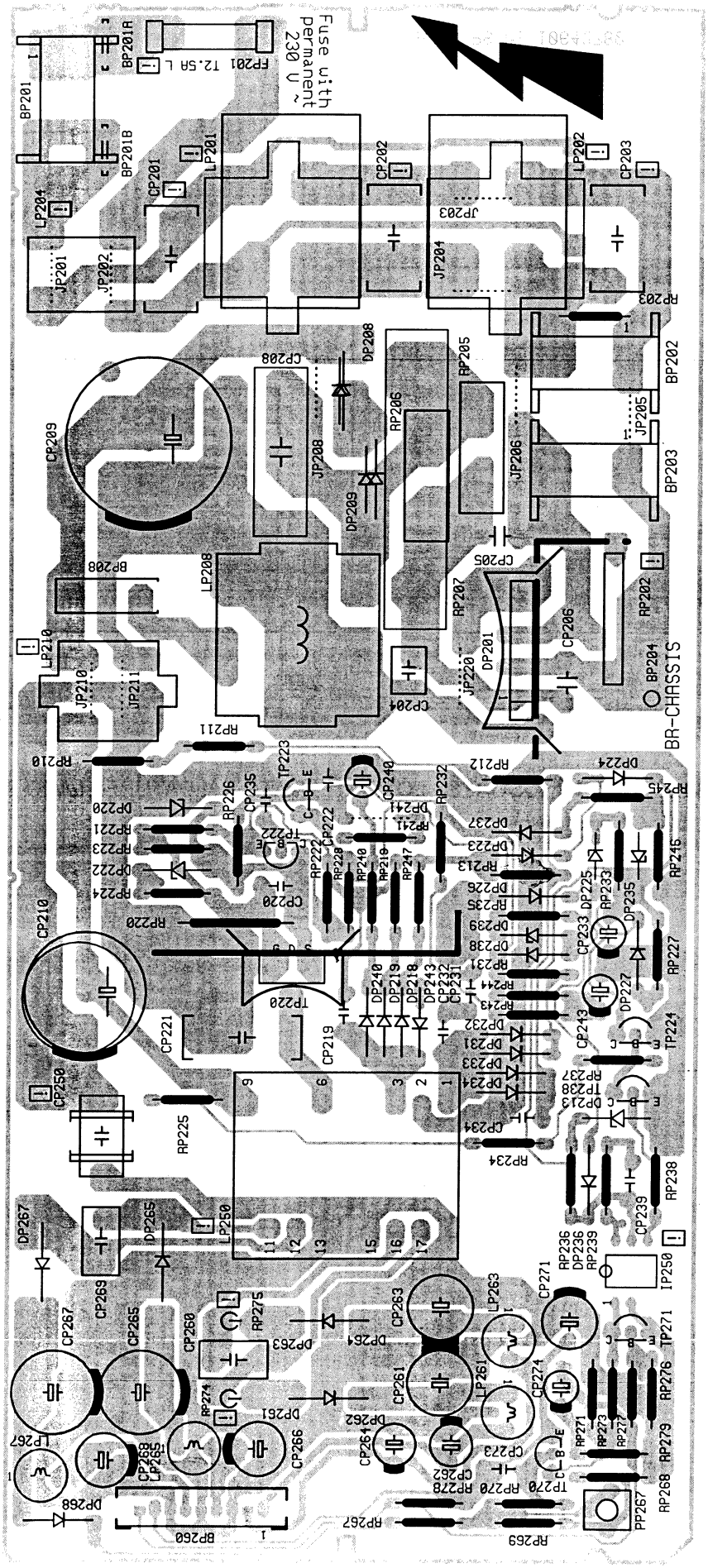

PS RP19 01

SOLDER SIDE - CÔTE SOUDURES - LÖTSEITE - LATO SALDATURE - LADO SOLDADURAS

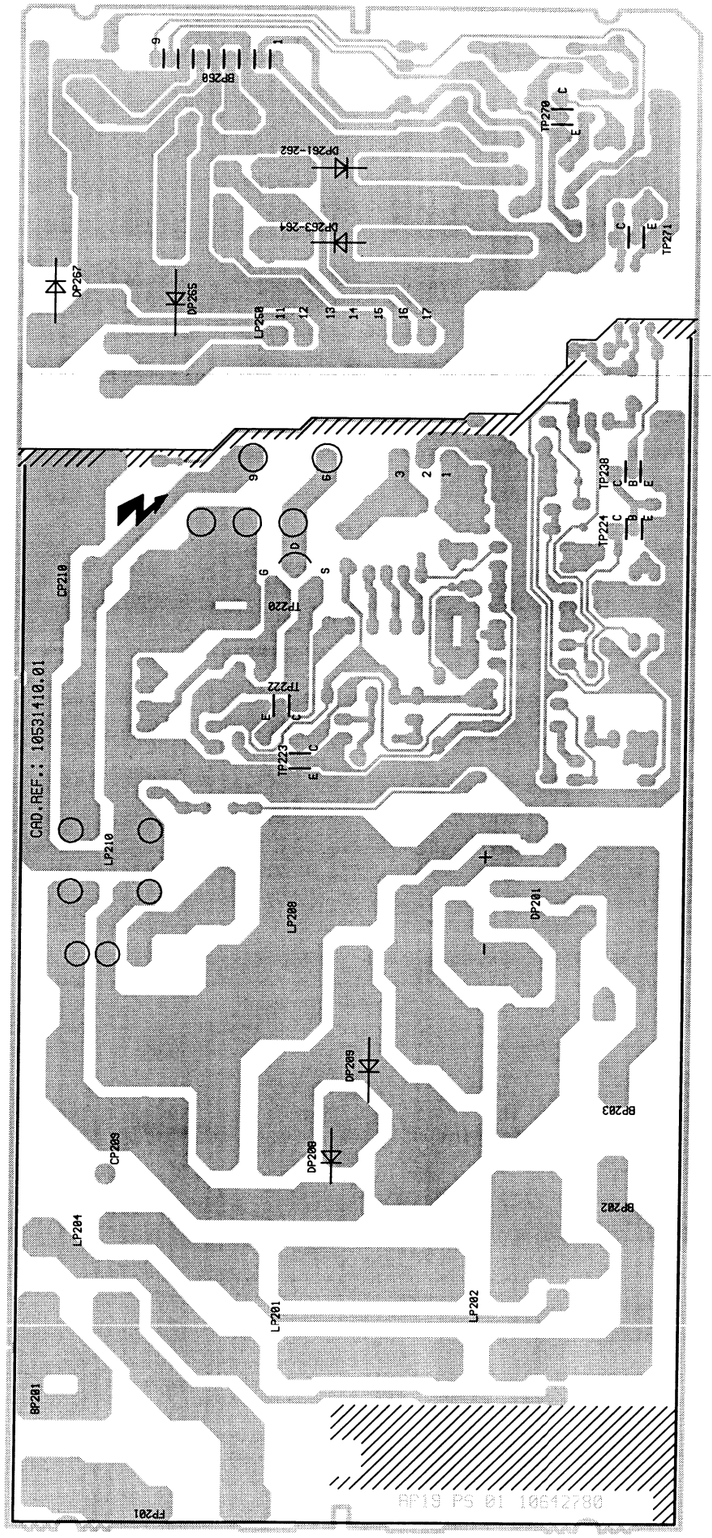

DIGITAL CONVERGENCE UNIT POWER SUPPLY - ALIMENTATION PLATINE DE CONVERGENCE
ALIMENTAZIONE CONVERGENZA DIGITALE - ALIMENTACIÓN DE LA UNIDAD DE CONVERGEN

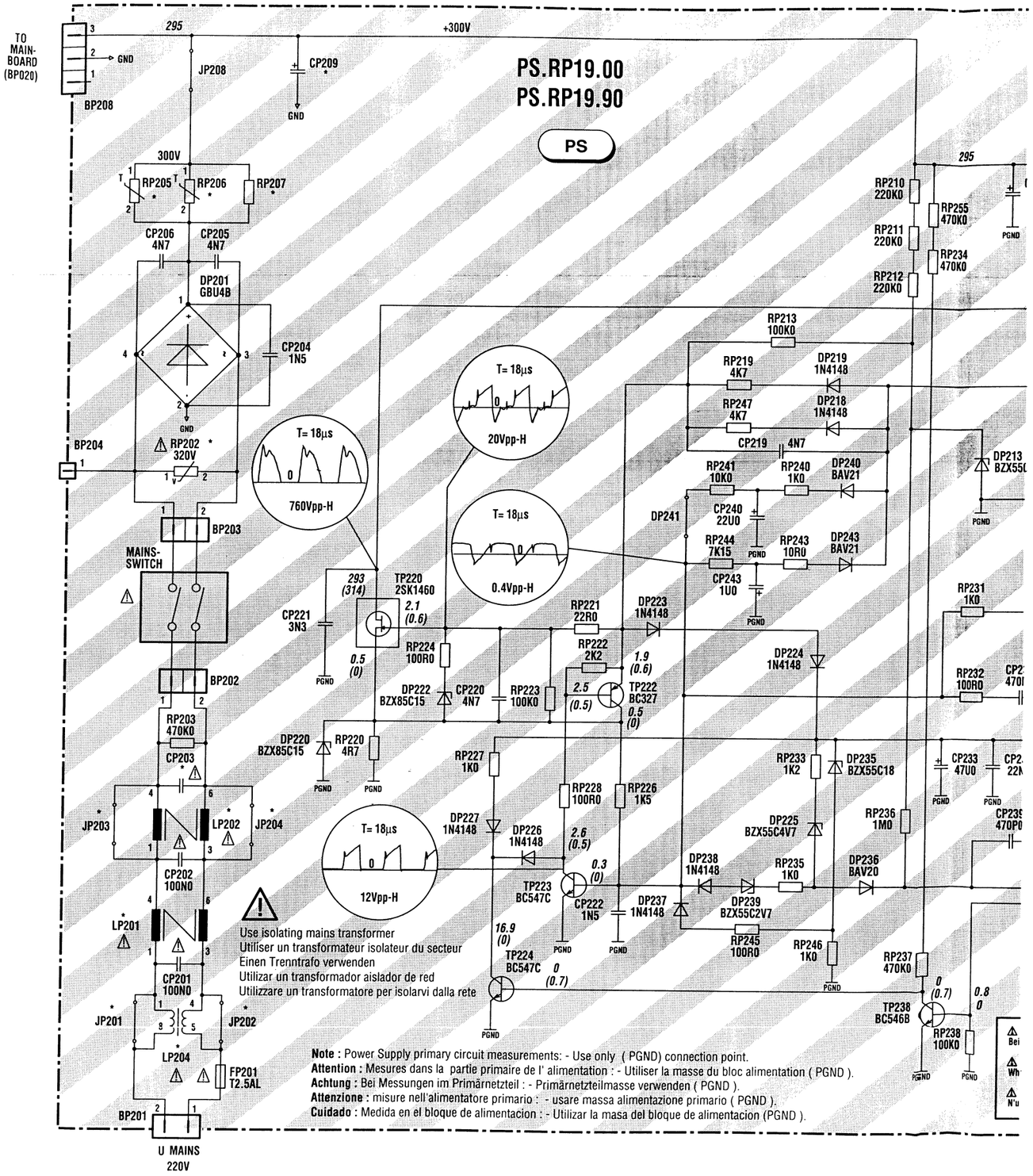

DIGITAL CONVERGENCE UNIT POWER SUPPLY - ALIMENTATION PLATINE DE CONVERGENCES NUMERIQUES - DIGITAL CONVERGENCE UNIT NETZTEIL - ALIMENTAZIONE CONVERGENZA DIGITALE - ALIMENTACIÓN DE LA UNIDAD DE CONVERGENCIA DIGITAL

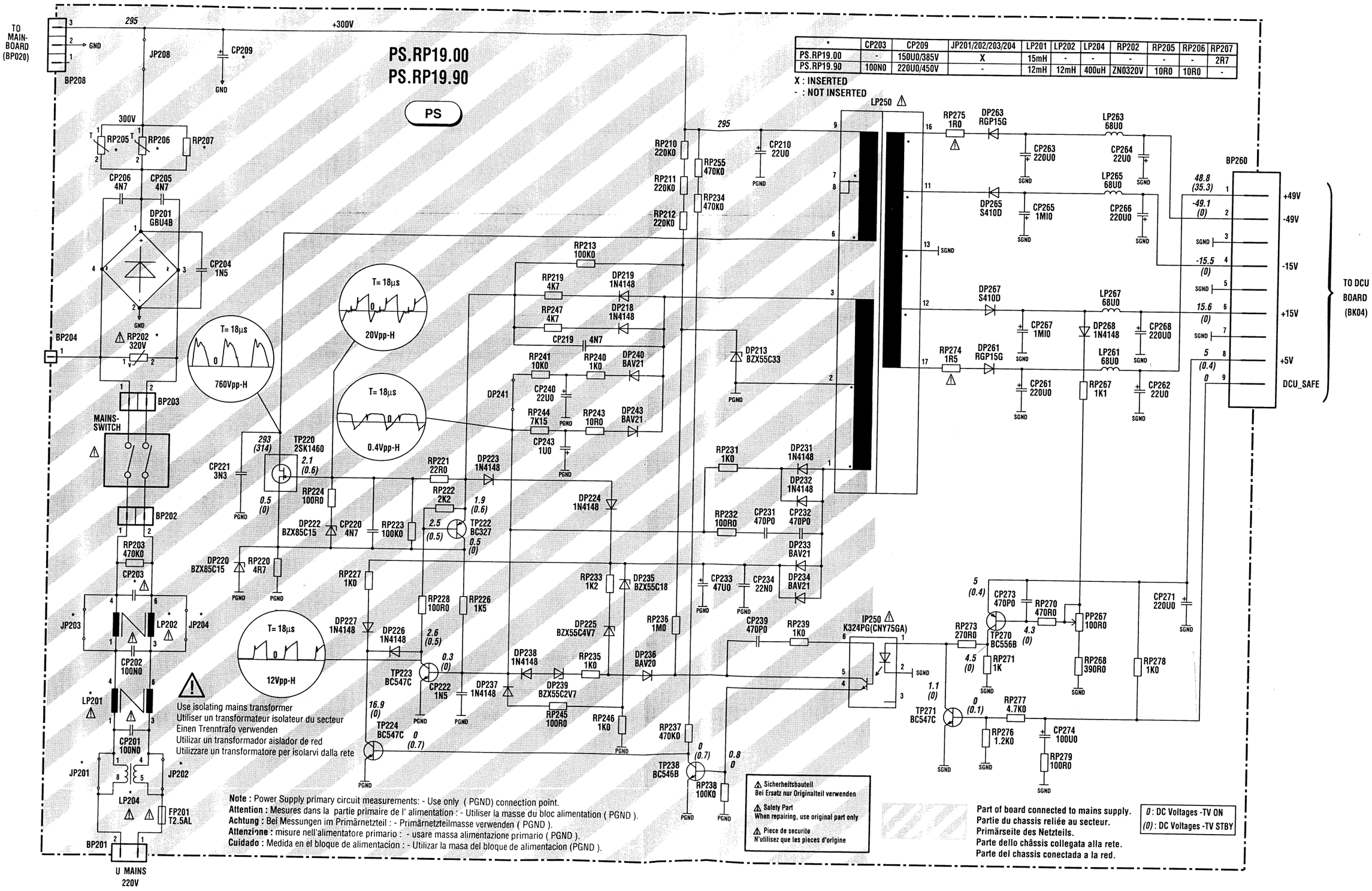

*	CP203	CP209	JP201/202/203/204	LP201	LP202	LP204	RP202	RP205	RP206	RP207
PS.RP19.00	-	150U0/385V	X	15mH	-	-	-	-	-	2R7
PS.RP19.90	100N0	220U0/450V	-	12mH	12mH	400uH	ZN0320V	10R0	10R0	-

X : INSERTED
- : NOT INSERTED

AUDIO SIGNAL MODULE DOLBY PROLOGIC - MODULE AUDIO DOLBY PROLOGIC - DOLBY PROLOGIC BAUSTEIN - MODULO AUDIO DOLBY PROLOGIC - MODULO AUDIO DOLBY PROLOGIC

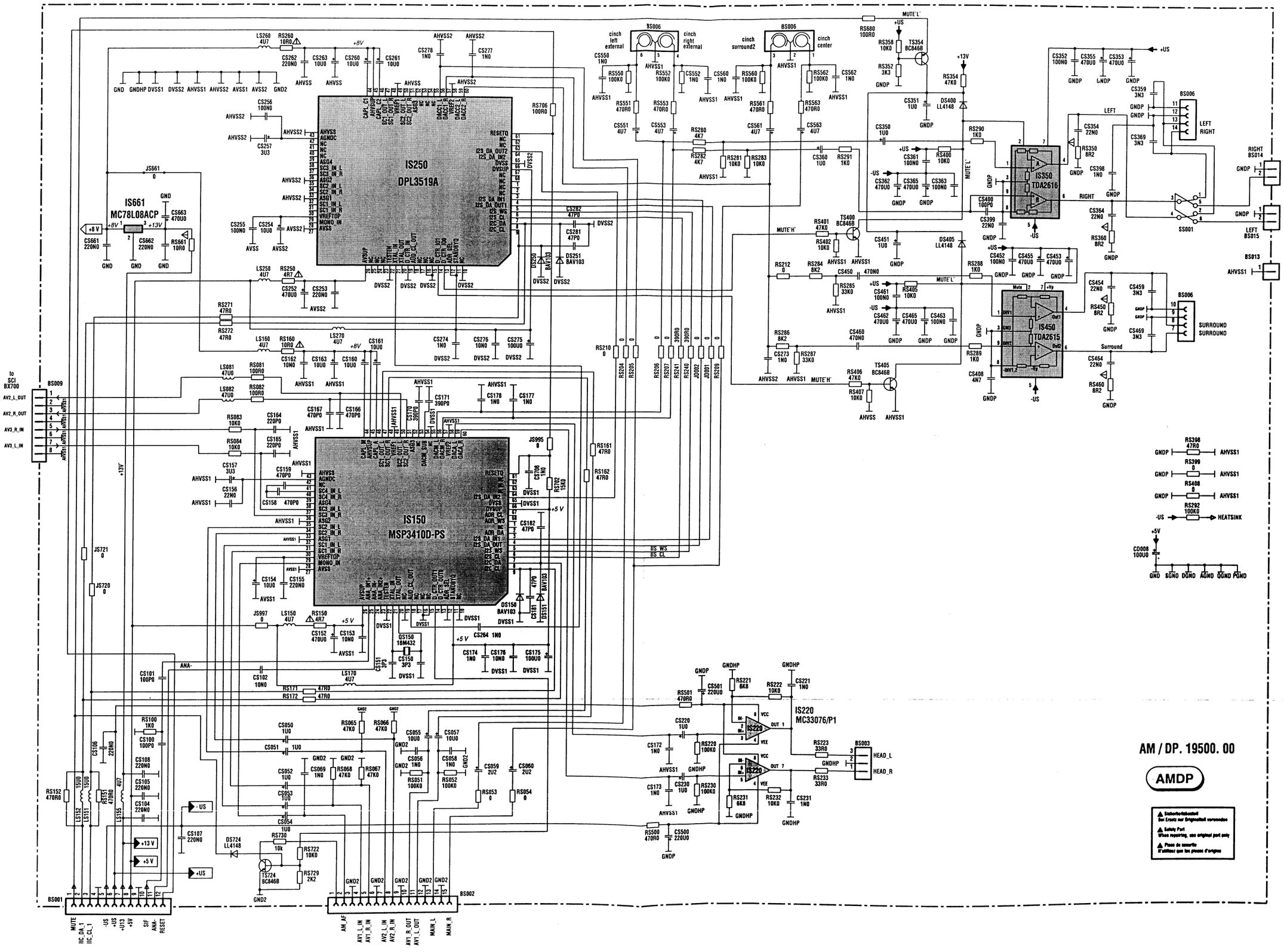

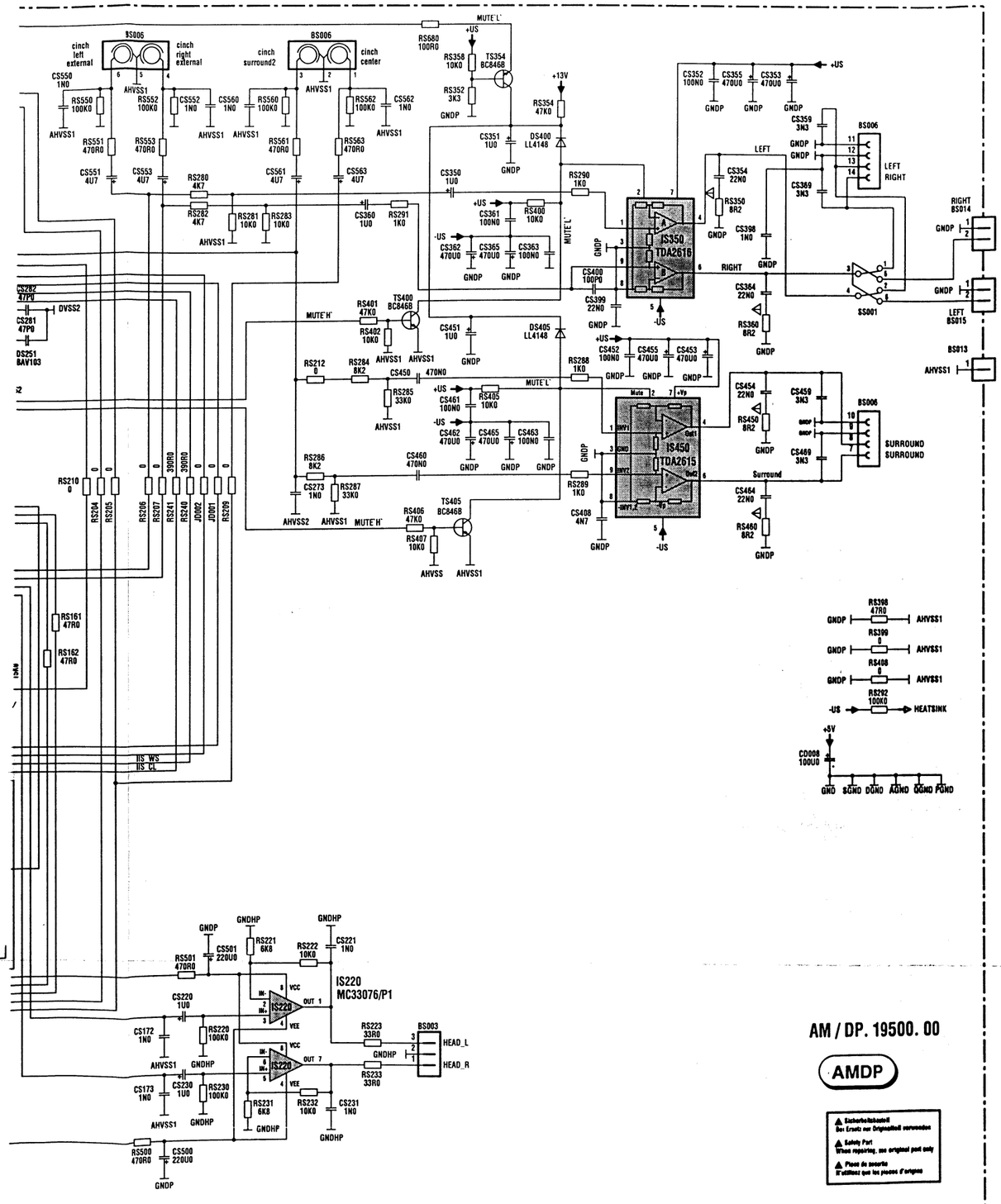

AM / DP 19500

COMPONENT SIDE - COTE COMPOSANTS - BESTÜCKUNGSSEITE
LATO COMPONENTI - LADO COMPONENTES

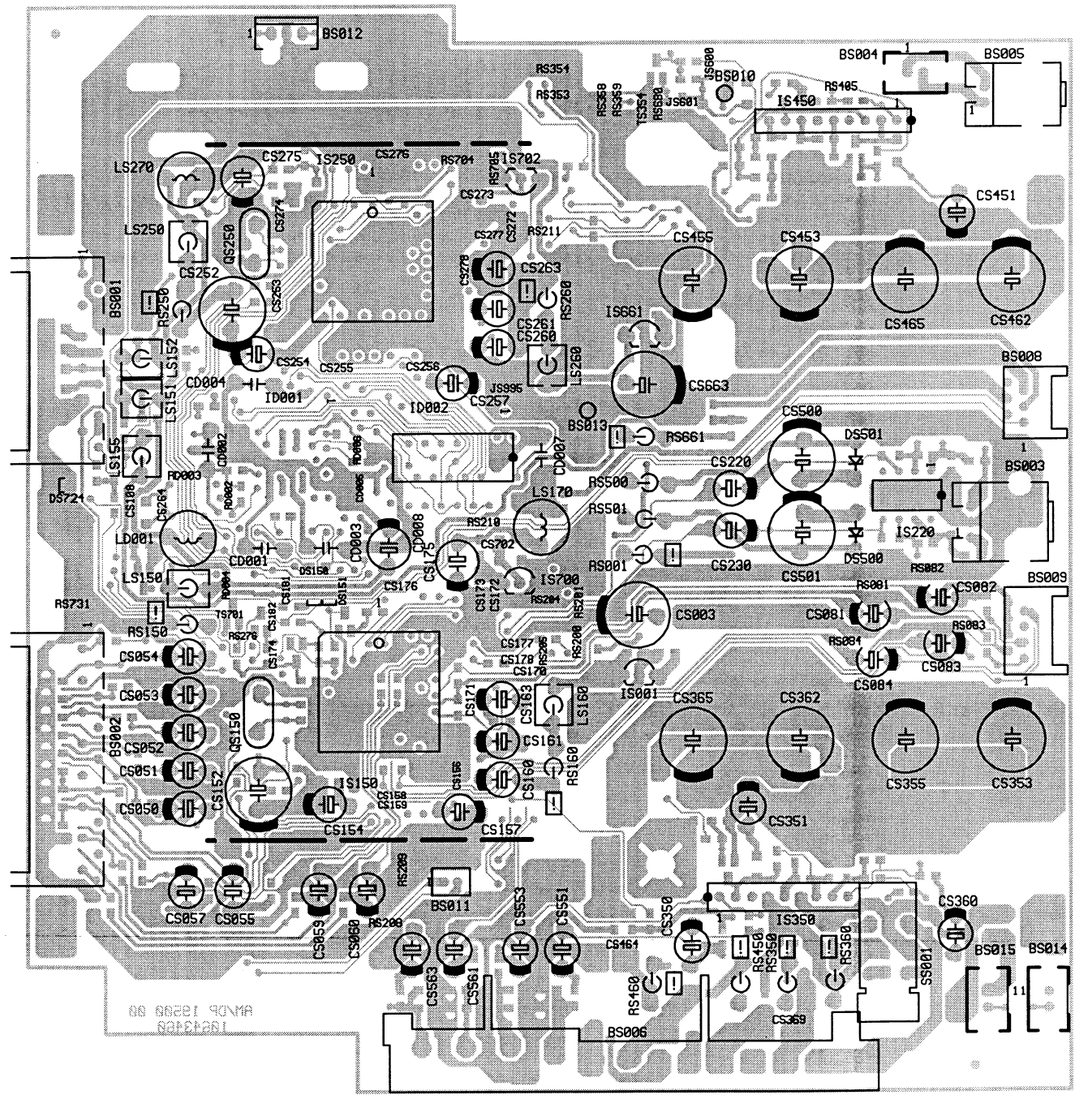

AM / DP 19500

SOLDER SIDE - CÔTE SOUDURES - LÖTSEITE - LATO SALDATURE - LADO SOLDADURAS

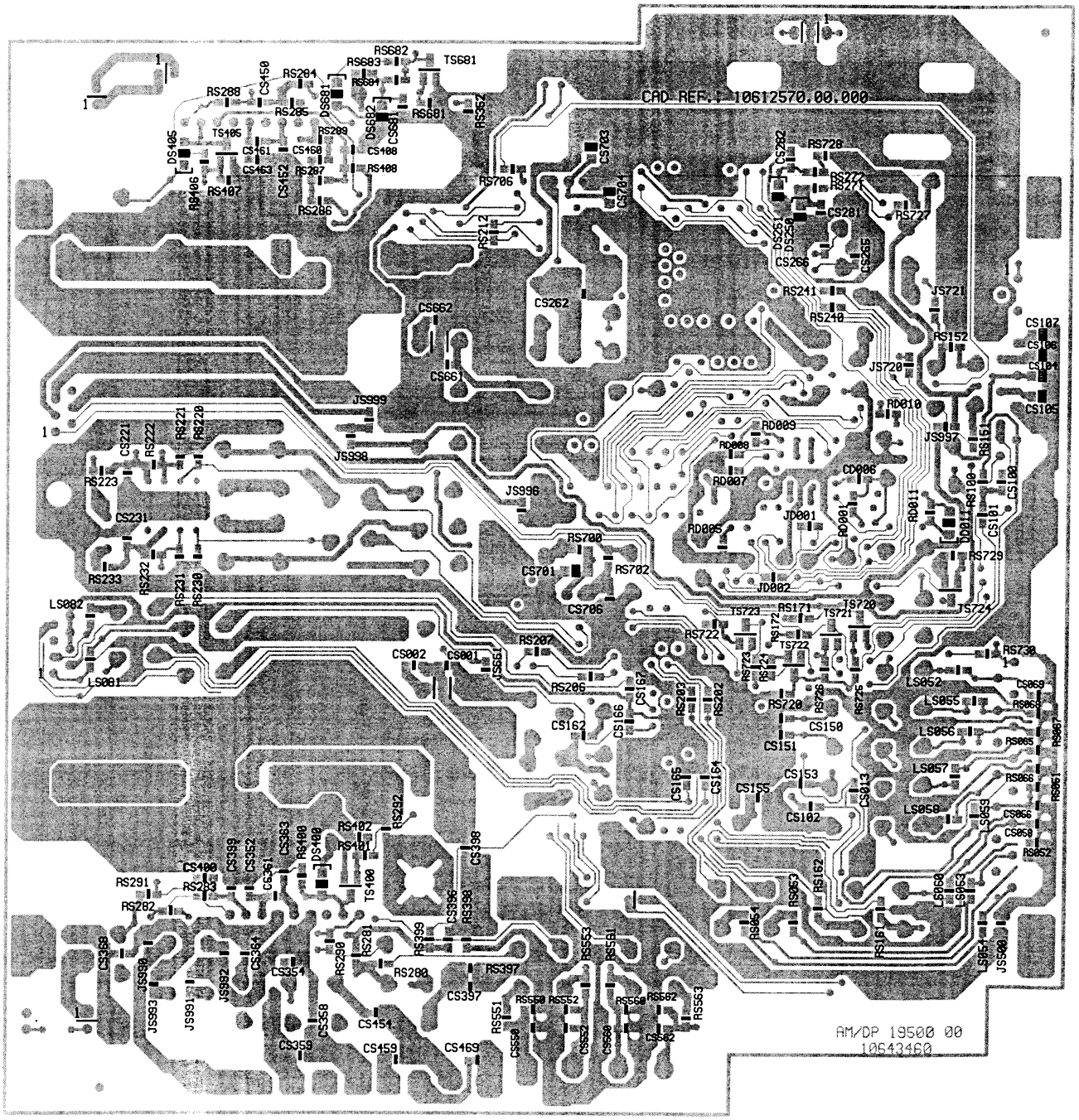

VHF / UHF TUNER CTT5010

(For information only)

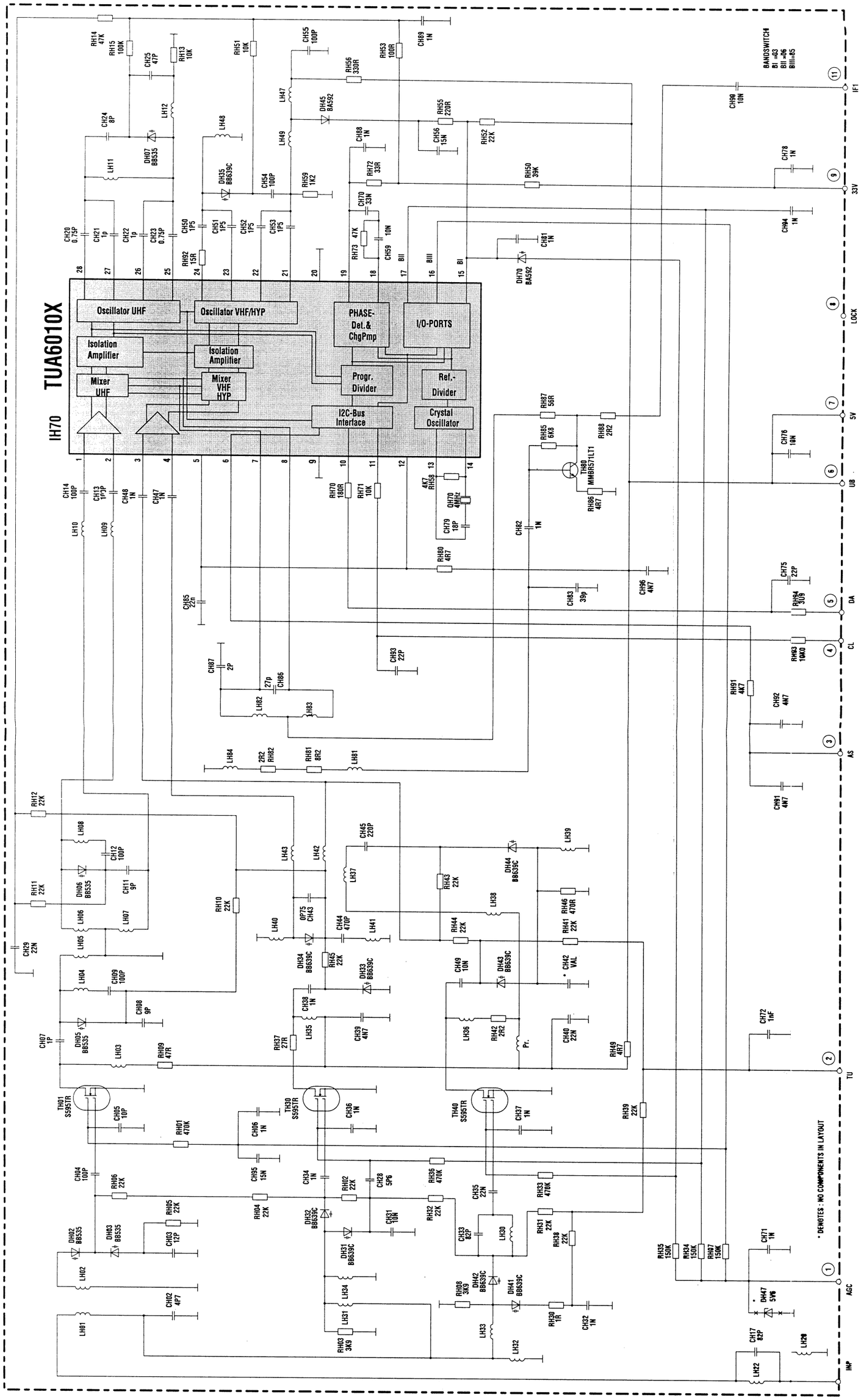

FRONT CONNECTOR BOARD - PRISES EN FACADE ET INTERCONNEXION DU CLAVIER - FRONT ANSCHLUSSPLATTE - PIASTRA CONNESSIONE FRONTALE - PLÁTINA MANDOS FRONTAL

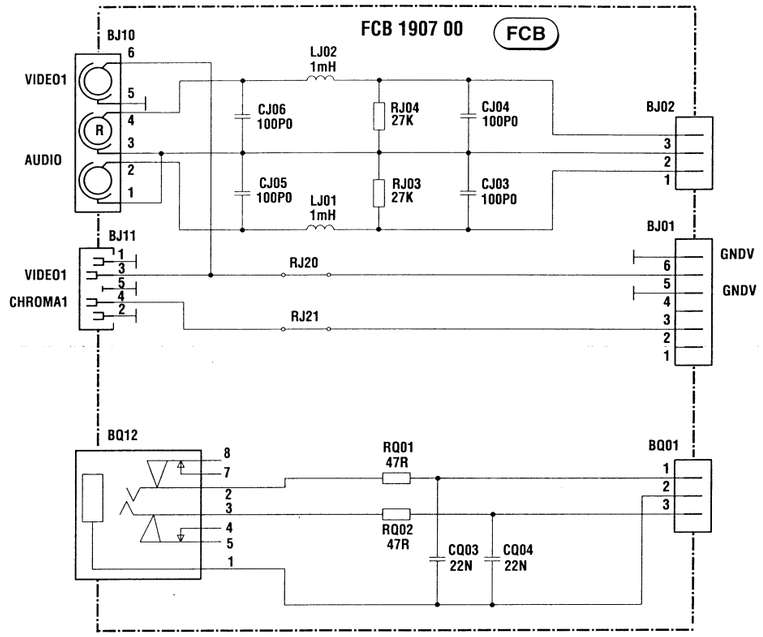

COMPONENT SIDE - COTE COMPOSANTS - BESTÜCKUNGSSEITE - LATO COMPONENTI - LADO COMPONENTES

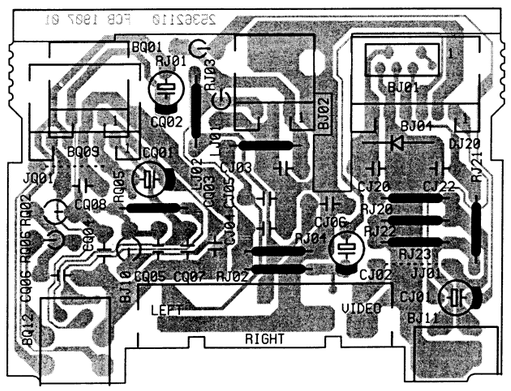

SOLDER SIDE - CÔTE SOUDURES - LÖTSEITE - LATO SALDATURE - LADO SOLDADURAS

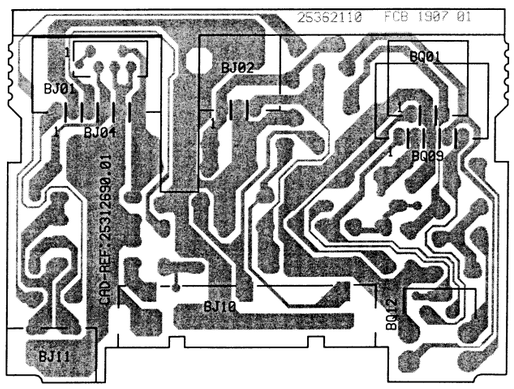

IR RECEIVER P.C.B. - PLATINE RECEPTEUR INFRA-ROUGE - IR EMPFÄNGER LTPL. PIASTRA RICEVITORE IR - PLATINA RECEPTOR IR

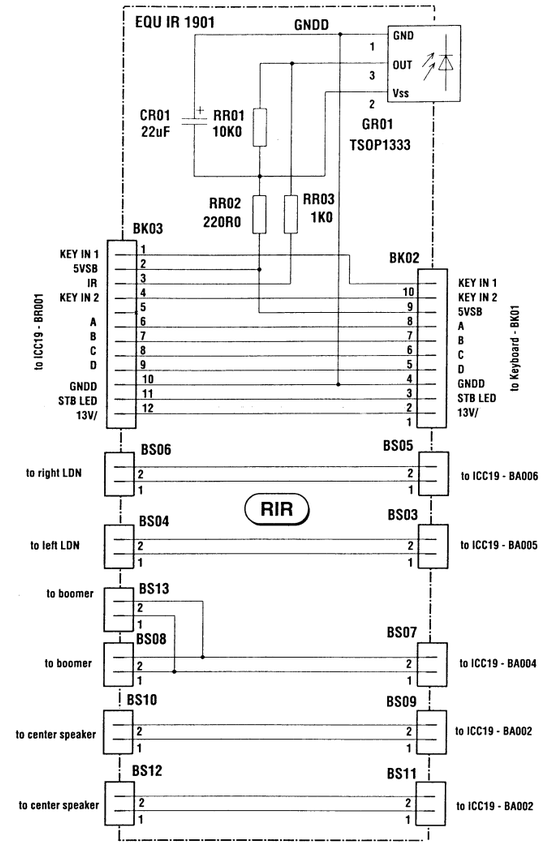

COMPONENT SIDE - COTE COMPOSANTS - BESTÜCKUNGSSEITE - LATO COMPONENTI - LADO COMPONENTES

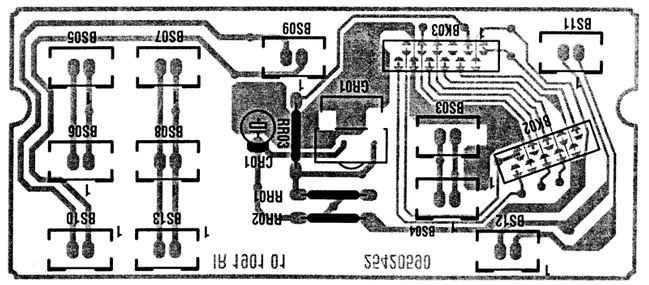

SOLDER SIDE - CÔTE SOUDURES - LÖTSEITE - LATO SALDATURE - LADO SOLDADURAS

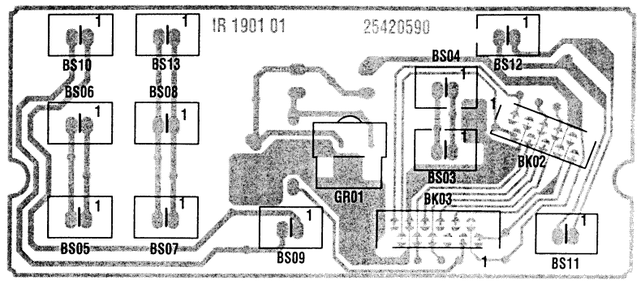

KEYBOARD MODULE - PLATINE CLAVIER - TASTATURPLATTE - PIASTRA COMANDI - PLATINA TECLADO

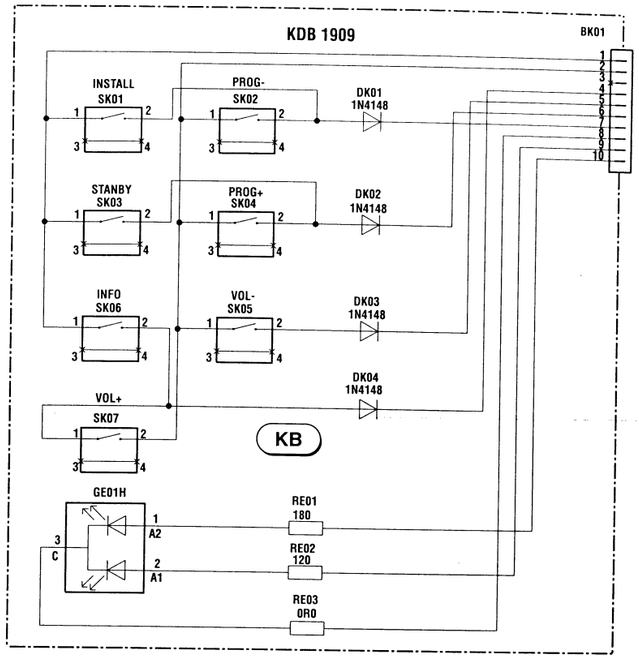

LDN 1907

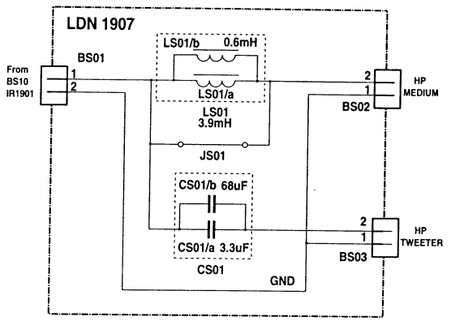

INTEGRATED CIRCUITS BLOCK DIAGRAMS - SYNOPTIQUES INTERNES DES CIRCUITS INTEGRES - INTEGRIERTE SCHALTUNGEN BLOCKSCHALTBILDER - SCHEMA A BLOCCHI DEI CIRCUITI INTEGRATI - VISTA INTERNA DE LOS CIRCUITOS INTEGRADOS

IY004 - SDA9189

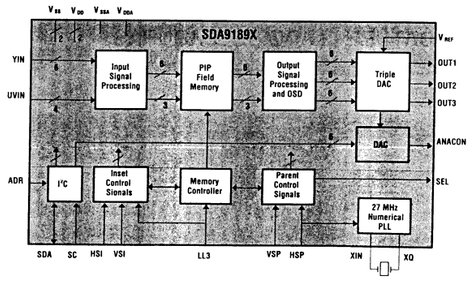

IV300 - TDA8755

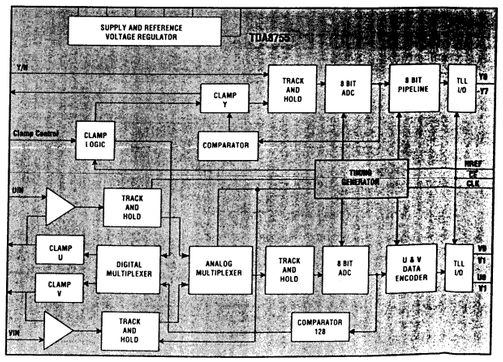

IV601 - TDA9143N

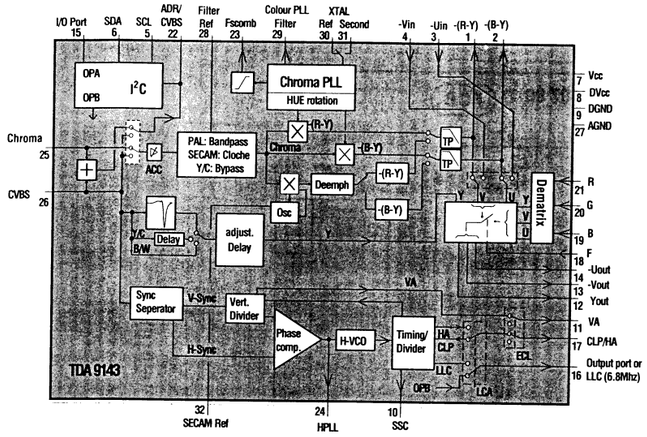

IY005 - TDA8601

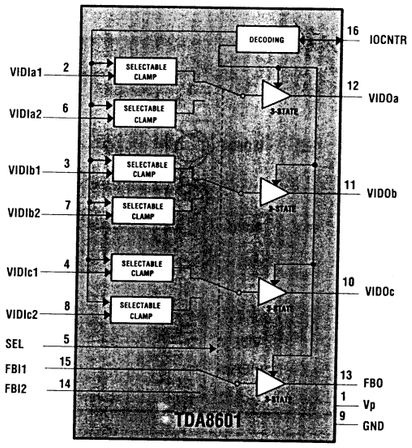

INTEGRATED CIRCUITS AND TRANSISTORS OUTLINE - CIRCUITS INTEGRES ET TRANSISTORS INTEGRIERTE SCHALTUNGEN UND TRANSISTOREN - CIRCUITI INTEGRATI TRANSISTOR CIRCUITOS INTEGRADOS Y TRANSISTORES

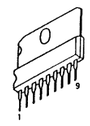

TDA 8139

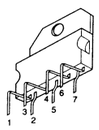

TDA 8177

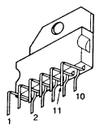

TDA7269

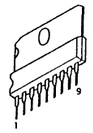

TEA 5101B

4N25TV

K324PG
M24C32BNI
MC7805CT
MC78C12CT
ST24C04-B1
TDA4605
X24164

TL084C

STV2145

TEA6415C

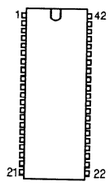

TDA9811

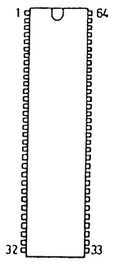

MPS3400
MPS3410

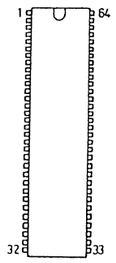

MPS3400
MPS3410

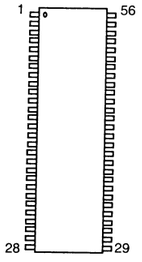

STV2162

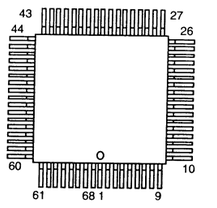

ST90R92

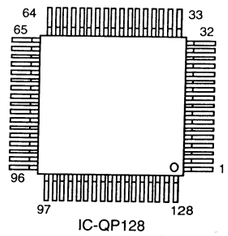

IC-QP128

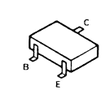

BCR141- BC846B
BC 847B-BC856B
BC857B-BF 799
BC 848 A/B/C

BC368
BF421
BF422
BF423

BC327
BC 337
BC546B
BC547B
BC 548B
BC557B
BC 558B

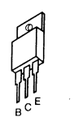

2SA1837
2SC4793
2SC3675
BD 241
TIP122

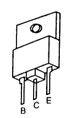

BUL810TH
BUV48CFITH16
BW93CFI
BW94CFI
ON4977

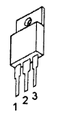

7805
7812
L7912CV

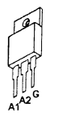

BT806 -600C

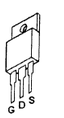

STP6 NA60F1
2SK1460

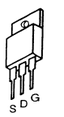

TR03-400T

LIST OF ABBREVIATIONS - LISTE DES ABREVIATIONS - ABKÜRZUNGEN
LISTA DELLE ABBREVIAZIONI - LISTA DE ABREVIACIONES

- **AV_R_ OUT** Audio Right-Out
- **AV_I_ OUT** Audio Left-Out
- **AV_R_ IN** Audio Right-In
- **AV_L_ IN** Audio Left-In
- **AV_C_ IN** Chroma-In
- **AV_Y_ IN** Video-In
- **AV_Y_ OUT** Video-Out
- **AV1_8** Pin-8 Detector
- **BEAM_INFO** BEAM CURRENT INFORMATION
- **BCL** BEAM CURRENT LIMITER
- **BG INFO** SWITCH BG
- **B_AV** BLUE SIGNAL FROM AV
- **BHD** BLUE HORIZONTAL DRIVE
- **BHR** BLUE HORIZONTAL REFERENCE
- **BIAG** BIAS GAMMA
- **B_TXT** BLUE SIGNAL FROM (TEXT OR PIP)
- **BVD** BLUE VERTICAL DRIVE
- **BVR** BLUE VERTICAL REFERENCE
- **CHROMA_2** CHROMA INPUT FROM PIP PICTURE
- **CRT_B** BLUE SIGNAL TO VIDEO AMPLIFIER
- **CRT_G** GREEN SIGNAL TO VIDEO AMPLIFIER
- **CRT_R** RED SIGNAL TO VIDEO AMPLIFIER
- **CVBS_SAT** SAT_VIDEO
- **DCR** DARK CURRENT SIGNAL OUTPUT
- **DEGAUSS** DEGAUSS SIGNAL
- **E.W_DRIVE** EAST - WEST DRIVE SIGNAL
- **EW_BACK** FEED BACK INFORMATION
- **FB_AV** FAST BLANK SIGNAL FROM AV SCART
- **FB DETEC** FAST BLANKING DETECT
- **FB_TXT** FAST BLANK SIGNAL (TEXT OR PIP)
- **FIL1** HEATER GROUND
- **FIL2** HEATER (6.3V RMS)
- **FOC** FOCUS
- **FRAME _DR** VERTICAL DEFLECTION DRIVE SIGNAL
- **G_AV** GREEN SIGNAL FROM AV
- **GHD** GREEN HORIZONTAL DRIVE
- **GHR** GREEN HORIZONTAL REFERENCE
- **GND** GROUND (0V)
- **GVD** GREEN VERTICAL DRIVE
- **GVR** GREEN VERTICAL REFERENCE
- **G_TXT** GREEN SIGNAL (TEXT OR PIP)
- **G2** G2 SUPPLY (+900V)
- **HDEFL1/2** HORIZONTAL DEFLECTION
- **H-BLUE** BLUE HORIZONTAL DEFLECTION
- **HDFL** HORIZONTAL SYNC.
- **HDRV** HORIZONTAL DEFLECTION DRIVE SIGNAL
- **H-GREEN** GREEN HORIZONTAL DEFLECTION
- **H-RED** RED HORIZONTAL DEFLECTION
- **HTR1 / HTR2** HEATER OUTPUT FROM THE DST TO CRT
- **I CUT** CUT OFF CURRENT
- **IIC-CL-1** I2C CLOCK BUS 1
- **IIC-CL-2** I2C CLOCK BUS 2
- **IIC-DA-1** I2C DATA BUS 1
- **IIC-DA-2** I2C DATA BUS 2
- **IR** INFRARED RECEIVER
- **L1_INFO** STANDARD L BAND 1
- **LDFL** LINE LOCKED CLOCK 27 MHz
- **LDR** LED DISPLAY
- **MAIN _Y** Y FROM CHROMA DECODER
- **MAIN _U** U FROM CHROMA DECODER
- **MAIN _V** V FROM CHROMA DECODER
- **M-RES** MASTER RESET TO MICROPROCESSOR
- **MUTE** MUTES AUDIO AMPLFIERS
- **NMI** NON MASKABLE INTERRUPT (alternate function of Pin 55 STR092)
- **NORM** SWITCH POLARITY OF THE VIDEO SIGNAL TUNER
- **PLL-ON** ENABLE DEFLECTION PLL
- **PKS** SIGNAL FOR ABL CIRCUIT (STV2161/STV2162)
- **R_AV** RED SIGNAL FROM AV
- **RHD** RED HORIZONTAL DRIVE
- **RHR** RED HORIZONTAL REFERENCE
- **RJR** RED VERTICAL REFERENCE
- **RVD** RED VERTICAL DRIVE
- **R_TXT** RED SIGNAL OUTPUT (TEXT OR PIP)
- **SAFE** SAFETY INFORMATION FROM DEFLECTION
- **SMPS_IN** FEED BACK SIGNAL FOR POWER SUPPLY REGULATION (STV2161/2)
- **SSC** SUPERSAND CASTEL PULSE
- **TEMP_ABL** SIGNAL DST-TEMPERATURE SENSING CIRCUIT
- **T1_CVBS** COMPOSITE VIDEO BASEBAND FROM TUNER
- **U_SCART** SCART VOLTAGE
- **+USYS** SYSTEM VOLTAGE
- **+/- US** SOUND VOLTAGE
- **+UVERT** VERTICAL VOLTAGE
- **+UVFB** VERTICAL RETRACE VOLTAGE
- **+UVIDEO** VIDEO VOLTAGE FOR THE CRT BOARD
- **VA** VERTICAL REFERENCE OUT FROM TDA 9143
- **VDFL** VERTICAL SYNC.
- **VIDEO_1** VIDEO INPUT FROM MAIN PICTURE
- **VIDEO_2** VIDEO INPUT FROM PIP PICTURE
- **V-BLUE** BLUE VERTICAL DEFLECTION
- **V-GREEN** GREEN VERTICAL DEFLECTION
- **V-RED** RED VERTICAL DEFLECTION
- **V-SYNC** VERTICAL SYNC.FOR TELETEXT MODULE
- **5 V** 5V POWER SUPPLY
- **13 V** 12V POWER SUPPLY
- **5 VSTBY** 5V STAND BY
- **10 VSTBY** 10V STAND BY

THOMSON MULTI MEDIA

Brandt FERGUSON **NORDMENDE** SABA **TELEFUNKEN** **THOMSON**

TV

SERVICE MANUAL
DOCUMENTATION TECHNIQUE
TECHNISCHE DOKUMENTATION
DOCUMENTAZIONE TECNICA
DOCUMENTACION TECNICA

ICC19 100 Hz

ICC19 B5B40240 00
B5BB0240 00
B5D80240 00
B5D80740 00
B5E80640 00
B5E80740 00
B5F80240 00

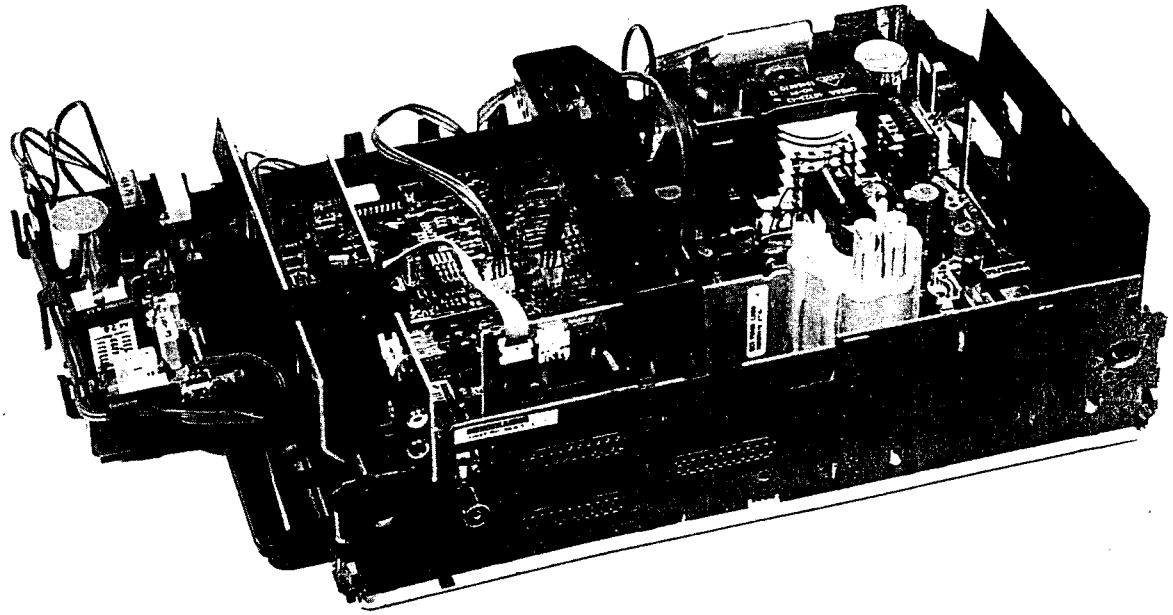

WARNING : *Before servicing this chassis read the safety recommendations.*
ATTENTION : *Avant toute intervention sur ce châssis, lire les recommandations de sécurité.*
ACHTUNG : *Vor jedem Eingriff auf diesem Chassis, die Sicherheitsvorschriften lesen.*
ATTENZIONE : *Prima di intervenire sullo chassis, leggere le norme di sicurezza.*
IMPORTANTE : *Antes de cualquier intervención, leer las recomendaciones de seguridad.*

⚠ Indicates critical safety components, and identical components should be used for replacement. Only then can the operational safety be garanteed.

Le remplacement des éléments de sécurité (repérés avec le symbole ⚠) par des composants non homologués selon la Norme CEI 65 entraine la non-conformité de l'appareil. Dans ce cas, la responsabilité du fabricant n'est plus engagée.

Wenn Sicherheitsteile (mit dem Symbol ⚠ gekennzeichnet) nicht durch Original - Ersatzteile ersetzt werden, erlischt die Haftung des Herstellers.

La sostituzione degli elementi di sicurezza (marcati con il segno ⚠) con componenti non omologati secondo la norma CEI 65 comporta la non conformitá dell'apparecchio. In tal caso è "esclusa la responsabilità " del costruttore.

La sustitución de elementos de seguridad (marcados con el simbolo ⚠) por componentes no homologados segun la norma CEI 65, provoca la no conformidad del aparato. En ese caso, el fabricante cesa de ser responsable.

MEASUREMENT CONDITIONS - CONDITIONS DE MESURES - MESSBEDINGUNGEN CONDIZIONI DI MISURA - CONDICIONES DE MEDIDAS

RECEIVER : On UHF,input level : 1 mV, bar test pattern :
- PAL, I standard, 100% white.

Via the scart socket, input level : 1 Vpp, bar test pattern :

Colour, contrast and brightness at mid-position, sound at minimum.
Programme selected : PR 01.

DC voltages measured between the point and earth using a digital voltmeter.

RECEPTEUR : En UHF, niveau d'entrée 1 mV mire de barres
- SECAM, Norm L, Blanc 100%.

Par la prise Péritélévision, niveau d'entrée 1 Vcc, mire de barres .

Couleur, contraste, lumière à mi-course, son minimum.
Programme affecté PR 01.

Tensions continues relevées par rapport à la masse avec un voltmètre numérique.

EMPFÄNGER : Bei UHF Eingangspegel 1 mV, Farbbalken :
- PAL, Norm G, Weiss 100%.

Über die Scartbuchse : Eingangspegel 1 Vss, Farbbalken :

Farbe, Kontrast, Helligkeit in der Mitte des Bereichs, Ton auf Minimum.
Zugeordnetes Programm PR 01.

Gleichspannungen mit einem digitalen Voltmeter zur Masse gemessen.

RICEVITORE : In UHF, livello d'entrata 1 mV, monoscopio par barre :
- PAL, norma G, bianco 100%.

Par la presa SCART, livello d'entrata 1 Vcc, monoscopio per barre :

Colore, Contrasto, Luce a metá corsa, Suono minimo.
Programma designato PR 01.

Tensioni continue rilevate rispetto alla massa con un voltametro numerico.

RECEPTOR : En UHF, nivel de entrada 1 mV, mira de barras :
- PAL, norma G, blanco 100%.

Por la toma Peritelevision, nivel de entrada 1 Vpp mira de barra.

Color, Contraste, luz a mitad de carrera, Sonido mínimo.
Programa afectado PR 01.

Tensiones continuas marcadas en relacion a la masa con un voltimetro digital.

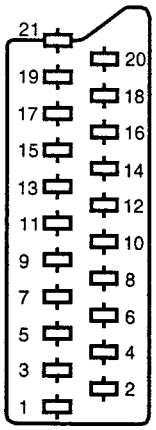

NOTE : (MAIN) ... etc. identifies each pcb module.

NOTE : (MAIN) ... etc. repères des platines constituant l'appareil.

HINWEIS : (MAIN) ...usw. Kennzeichnung der Platinen, aus denen das Gerät zusammengesetzt ist.

NOTA : (MAIN) ... ecc. indicazioni delle piastre che costituiscono l'apparecchio.

NOTA : (MAIN) ... etc. marcas de las placas que constituyen el aparato.

		ENGLISH	FRANÇAIS	DEUTSCH	ITALIANO	ESPAÑOL
1	⊖→	AUDIO "R"	AUDIO "D"	AUDIO "R"	AUDIO "D"	AUDIO "D"
2	→⊕	AUDIO "R"	AUDIO "D"	AUDIO "R"	AUDIO "D"	AUDIO "D"
3	⊖→	AUDIO "L"	AUDIO "G"	AUDIO "L"	AUDIO "S"	AUDIO "I"
4	⏚	AUDIO	AUDIO	AUDIO	AUDIO	AUDIO
5	⏚	" BLUE "	" BLEU "	"BLAU"	"BLU"	"AZUL"
6	→⊕	AUDIO "L" MONO	AUDIO "G" MONO	AUDIO "L" MONO	AUDIO "S" MONO	AUDIO "I" MONO
7	→⊕	" BLUE "	" BLEU "	"BLAU"	BLU	AZUL
8	→⊕	SLOW SWITCH	COMMUT. LENTE	AV UMSCHALTUNG	"COMMUTAZIONE LENTA"	"CONMUTACION LENTA"
9	⏚	" GREEN "	"VERT"	"GRÜN"	"VERDE"	"VERDE"
10	NC					
11	→⊕	" GREEN "	"VERT""	"GRÜN"	"VERDE"	"VERDE"
12	NC					
13	⏚	" RED "	"ROUGE"	"ROT"	"ROSSO"	"ROJA"
14	NC					
15	→⊕	" RED "	"ROUGE"	"ROT"	"ROSSO"	"ROJA"
16	→⊕	FAST SWITCH	COMMUT. RAPIDE	AUSTASTUNG	"COMMUTAZIONE RAPIDA"	"CONMUTACION RAPIDA"
17	⏚	VIDEO	VIDEO	VIDEO	VIDEO	VIDEO
18	⏚	FAST SWITCH	COMMUT. RAPIDE	AUSTASTUNG	"COMMUTAZIONE RAPIDA"	"CONMUTACION RAPIDA"
19	⊖→	VIDEO	VIDEO	VIDEO	VIDEO	VIDEO
20	→⊕	VIDEO OR "SYNC"	VIDEO SYNCHRO	VIDEO ODER SYNCHRO	VIDEO O SINCRO	VIDEO O SINCRO
21	⊖→	PLUG SCREEN BOX	BLINDAGE PRISE	ABSCHIRMUNG DES STECKERS	ARMATURA DELLA SPINA	BLINDAJE DEL ENCHUFE

⊖→ : OUTPUT - SORTIE - AUSGANG - USCITA - SALIDA

→⊕ : INPUT - ENTRÉE - EINGANG - ENTRATA - ENTRADA

⏚ : EARTH - MASSE - MASSE - MASSA - MASA

INFORMATION - INFORMATIONS - INFORMATIONEN - INFORMAZIONE - INFORMACIONES

CHASSIS DESIGNATION - DESIGNATION DES CHASSIS -BEZEICHNUNG DES CHASSIS - DESCRIZIONE DEI TELAI - DESIGNACIÓN DE LOS CHASIS

(GB) The references mentioned on the cover give the list of chassis covered in the present document.
The designation of a specific chassis equipping the receptor is marked on the identification plate placed at the back of the apparatus.

(F) Les références indiquées en couverture donnent la liste des chassis traités dans le présent document.
La désignation d'un chassis spécifique équipant le récepteur est inscrite sur la plaque signalétique située à l'arrière de l'appareil.

(D) Die auf dem Deckblatt angegeben Nummern sind die in dieser Unterlage enthaltenen Chassis

(I) I riferimenti indicati in copertina danno la lista dei telai trattati nel presente documento.
La descrizione di un telaio specifico installato sul ricevitore figura sulla targa delle caratteristiche situata sulla parte posteriore dell'apparecchio.

(E) Las referencias indicadas en la cubierta dan la lista de los chasis tratados en el presente documento.
La designación de un chasis específico que equipa el receptor se inscribe en la placa del fabricante, situada en la parte trasera del aparato.

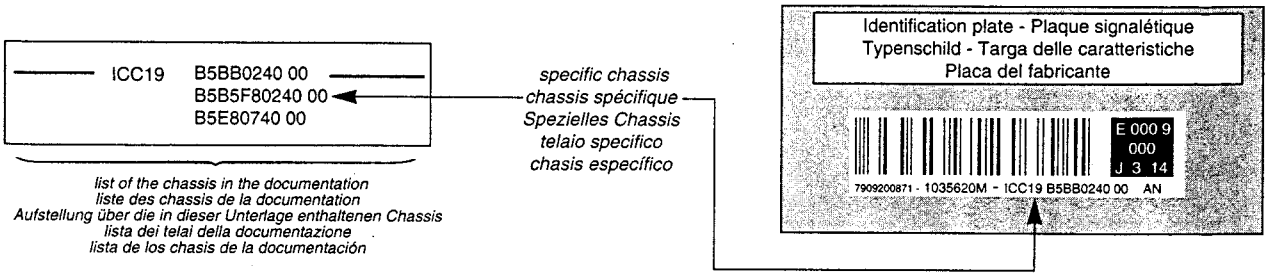

RECEIVER COMPOSITION - COMPOSITION DES RECEPTEURS - BESTÜCKUNG DER EMPFÄNGER - COMPOSIZIONE DEI RICEVITOR - COMPOSICIÓN DE LOS RECEPTORES

Chassis identification table:
1- Main chassis designation code
2- Chassis configuration (modules) and the page number's where they are described.
3- The chassis - environment pair that are contained in the receptors described in the present documentation.

Le tableau ci-dessous regroupe :
1- La désignation des chassis
2- L'environnement électronique de chaque chassis (modules) et le numéro de page où il est décrit.
3- L'association chassis-environnement composant les récepteurs décrits dans la présente documentation.

Die nachfolgendeTabelle beinhaltet:
1 - Die Chassisbezeichnung
2 - Die elektrischen Baugruppen (Module) der Chassis und die Seitenzahl auf der sie abgebildet sind.
3 - Die Chassis und Module der Empfänger aus dieser Dokumentation.

La tabella qui di seguito contiene:
1 - La descrizione dei telai
2 - La configurazione di ogni telaio (moduli) e il numero di pagina nella quale è descritto
3 - L'abbinamento telaio-struttura che compone i ricevitori descritti nella presente documentazione

El cuadro siguiente agrupa:
1 - La designación de los chasis
2 - El entorno electrónico de cada chasis (módulos) y el número de página donde está descrito.
3 - La asociación chasis - entorno que compone los receptores descritos en la presente documentación

ICC19 100 Hz

DESCRIPTION CHASSIS	BLOCK DIAGRAM	ADJUST. MAIN	PCB MAIN	SCHEMA MAIN	VIDEO MODULE	CRT MODULE	AUDIO MODULE	TELETEXT MODULE	SCART MODULE	KDB - FCB KB
ICC19 B5B40240 00	5 to 6	7 to 16	17 to 23	24 to 30	31 to 35	36 to 38	39 to 41	42 to 44	45 to 47	48 to 50
ICC19 B5BB0240 00	5 to 6	7 to 16	17 to 23	24 to 30	31 to 35	36 to 38	39 to 41	42 to 44	45 to 47	48 to 50
ICC19 B5D80240 00	5 to 6	7 to 16	17 to 23	24 to 30	31 to 35	36 to 38	39 to 41	42 to 44	45 to 47	48 to 50
ICC19 B5D80740 00	5 to 6	7 to 16	17 to 23	24 to 30	31 to 35	36 to 38	51 to 54	42 to 44	45 to 47	48 to 50
ICC19 B5E80640 00	5 to 6	7 to 16	17 to 23	24 to 30	31 to 35	36 to 38	39 to 41	42 to 44	45 to 47	48 to 50
ICC19 B5E80740 00	5 to 6	7 to 16	17 to 23	24 to 30	31 to 35	36 to 38	51 to 54	42 to 44	45 to 47	48 to 50
ICC19 B5F80240 00	5 to 6	7 to 16	17 to 23	24 to 30	31 to 35	36 to 38	39 to 41	42 to 44	45 to 47	48 to 50

BLOCK DIAGRAM - SCHEMA SYNOPTIQUE - BLOCKSCHALTBILD - SCHEMA A BLOCCI - ESQUEMA DE BLOQUES

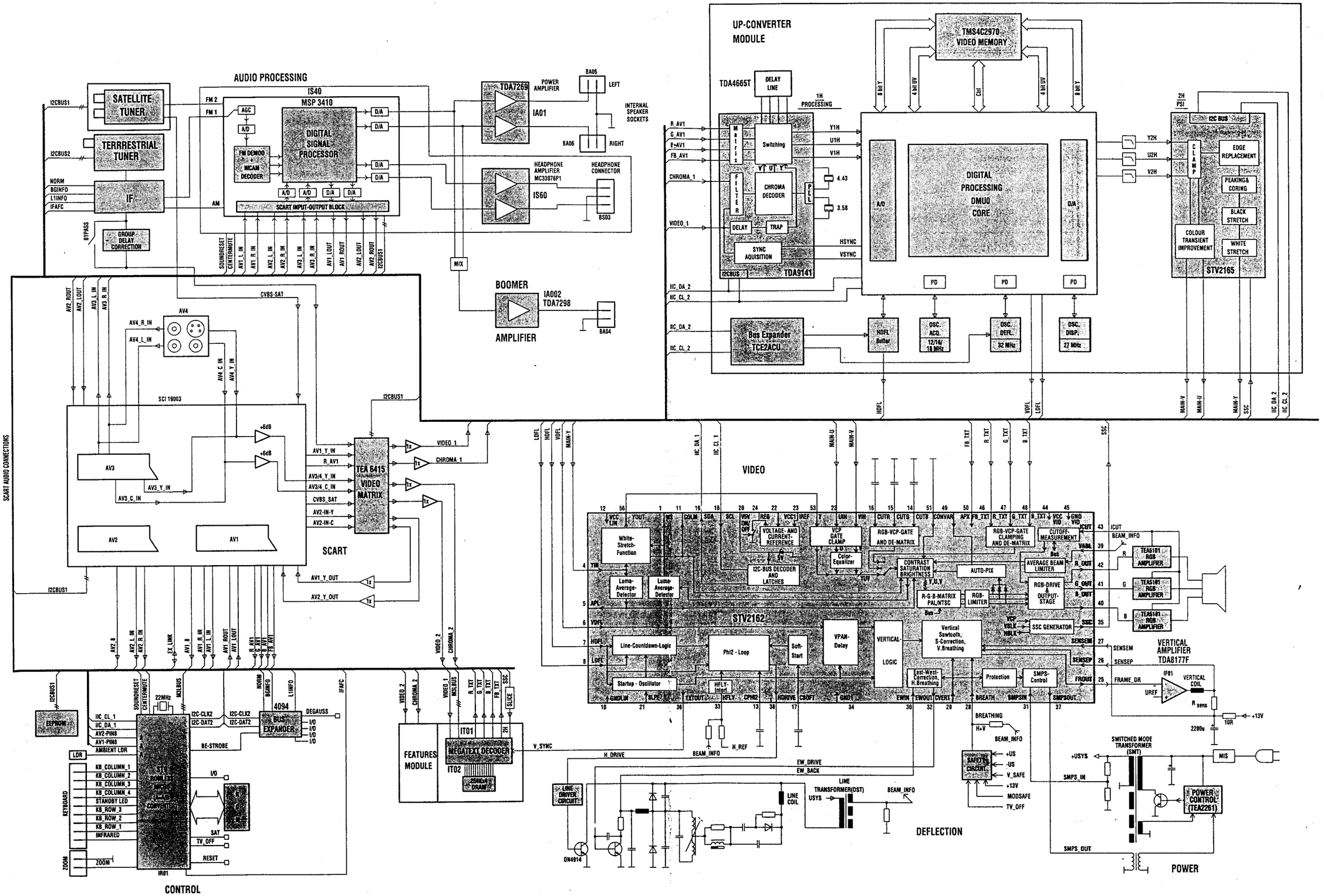

ICC19 100 Hz
First issue 09 / 97

⚠ Do not disconnect modules
Repairs on power supply s
only with isolating transfor

Ne pas retirer les modules
N'effectuer les travaux de r
reliée au secteur (Switch n
transformateur d'isolement

Module nicht bei eingescha
Servicearbeiten am Netztei
Regeltrenntrafos durchführ

Non scollegarei moduli qua
intraprendere riparazioni s
con transformatore isolante

No desconectar los módul
Las reparaciones en la sec
deben ser ejecutadas sola
separacion.

LOCATION OF CONTROLS - EMPLACEMENT DES REGLAGES - SERVICE LAGEPLAN - POSIZIONE REGULATORI DI SERVIZIO - SITUACIÓN DE LOS AJUSTES

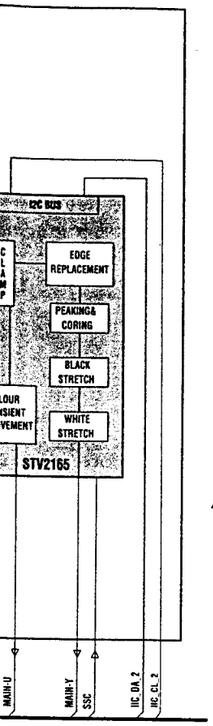

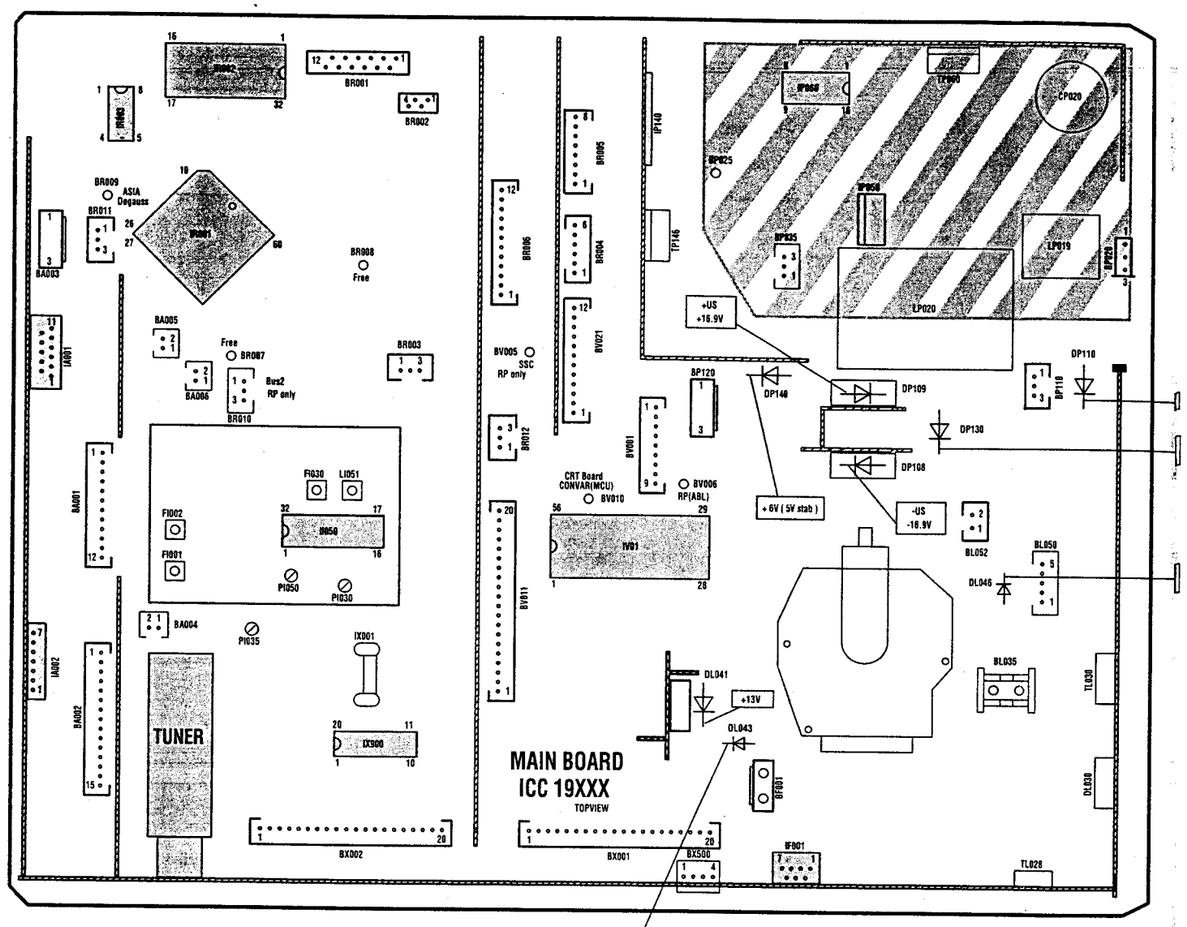

⚠ Do not disconnect modules when they are energized ! Repairs on power supply section are to be carried out only with isolating transformer.

Ne pas retirer les modules lorsqu'ils sont sous tension. N'effectuer les travaux de maintenance sur la partie reliée au secteur (Switch mode) qu'au travers d'un transformateur d'isolement.

Module nicht bei eingeschaltetem Gerät entfernen ! Servcearbeiten am Netzteil nur unter Verwendung eines Regeltrenntrafos durchführen.

Non scollegarei moduli quando sono alimentati ! intraprendere riparazioni sulla sezione alimentatore solo con transformatore isolante.

No desconectar los módulos cuando están activados ! Las reparaciones en la sección de alimentación de energia deben ser ejecutadas solamente con un transformador de separacion.

Part of Board connected to mains supply.
Partie du châssis reliée au secteur.
Primärseitedes Netzteils
Parte del panello collegato alla rete di alimentazione
Parte del chasis conectada a la red

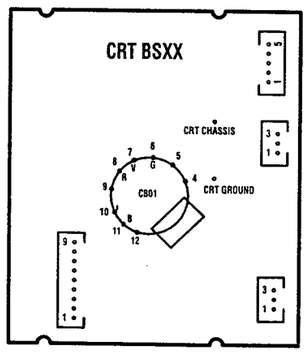

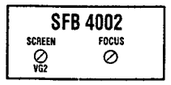

ADJUSTMENTS - REGLAGES - EINSTELLUNGEN - REGOLAZIONE - AJUSTES

U Sys	SERVICE MODE	Standard TV - Settings : OMA Position TV to AV1 : Black test pattern	V= DP 110	TUBE NAME / DESCRIPTION / Usys jumper / Usys A66EGW 48X322 / 4/3 28" MP / JP915 / 134V +/- 0.5V A59EGD048X322 / 4/3 25" SF / JP914 / 137V +/- 0.5V A68EGD038X322 / 4/3 29" SF / JP914 / 137V +/-0.5V A68EES038X322 / 4/3 29" SF / JP914 / 137V +/- 0.5V W66EGV023X122 / 16/9 28" SF / JP915 / 134V +/- 0.5V W76EGV023X122 / 16/9 32"SF / JP915 / 134V+/- 0.5V W76EGV023X122 / 16/9 28"SF / JP915 / 134V +/- 0.5V W76EGX023X122 / 16/9 32"SF / JP915 / 134V +/- 0.5V
IF Alignment VCO Standard BG	FI030	Switch set to standard BG IF Signal 38.9 MHz (BG) 30 mV G 75Ω TUNER 11 NH01	V= RI078 AFC (uP) 42 IR01	Adjust FI30 / PI54 for 2,5VDC +/-0.1V
VIDEO-LEVEL Alignment	PI030 PI035	Standard Signal (BG / L) 15kHz test pattern 3 mV G 75Ω TV set Antenna	Oscillo. SCART Video output	Adjust PI030 : standard BG Adjust PI035 : standard L for V = 0,7 Vpp (Black/white level)
U G2 METHOD 1 Measurment method	G2 poten-tiometer	Standard TV - Settings : OMA Position TV to AV1 : Black test pattern	highest output CRT 1910X (100Hz) : R signal : IB01 Pin 15 G signal : IB03 Pin 15 B signal : IB02 Pin 15	V 1 - Adjust VG2 : V= 160V +/- 5 V 2 - Adjust Focus 3 - Adjust VG2 : V= 160V +/- 3V
METHOD 2 Cutoff counter method SERVICE MODE	SERVICE MODE	Standard TV - Settings : OMA Position No test pattern (generated by internal text processor).		Adjust R-Cut off and G-Cut-off to 80H temporary. Select G2 Alignment in Service Mode Adjust the lowest value to: Select "Restore" in Service Mode and press "OK" to restore the cut-off values. Tube Type / Value A66EGW 60H A59EGD 50H A68EGD 50H A68EES - W66EGV 50H W76EGV 60H A90AFF 50H RP 4/3 - RP 16/9 -
FOCUS	FOCUS	Test pattern (standard values)		Sharp picture

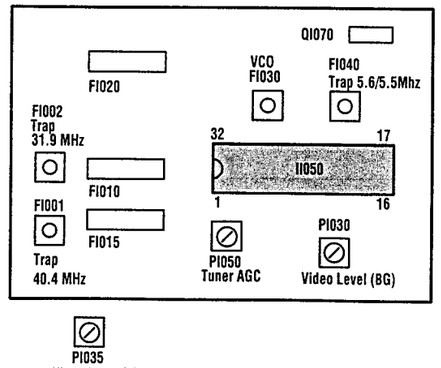

SERVICE MODE (GB) — MODE SERVICE (F)

I - ENTER/EXIT SERVICE MODE - ENTREE/SORTIE DU M

1 ACCESSING SERVICE MODE

TV Control Panel Access

- Turn "Off" the TV using the **ON/OFF** button.
- Press the **PR-** and **VOL-** buttons ,hold them down and switch "On" the TV with the **ON/OFF** button.
- After the normal switch on time the main service menu appears on the screen.

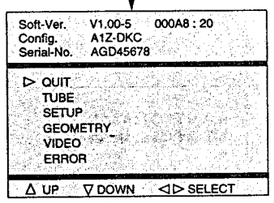

Note :

In service mode :
- *The child lock function is re-initialized*
- *The look function (PIN Number) is ignored.*
- *Clear any wake-up/sleep timers*
- *Pin 8 of the scart plug has to be ignored.*
- *AV- Link WSS detection , EPG and Teletext have to be disabled.*
- *Automatic stand-by functions, in case of no antenna signal have to be disabled.*
- *Contrast, colour, brightness : factory settings.*
- *Sharpness : middle (nominal)*
- *Contrast expander to low.*
- *Install Mode disabled.*
- *Default format and zoom..*

1 ACCES AU MODE SERVICE

Accès avec le clavier du téléviseur

- Arrêter le TV avec la touche **M/A.**
- Tout en appuyant sur les touches **PR -** et **VOL - ,** mettre le TV en service à l'aide de la touche **M/A.**
- Maintenir enfoncées les touches **PR -** et **VOL -.**
  Le menu suivant apparaît.

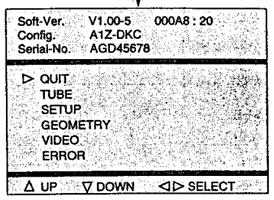

Note :

En mode service:
- *Le verrouillage parental est effacé (réinitialisé).*
- *La fonction de verrouillage (Pin number) est ignorée.*
- *La programmation des heures «reveille/matin» est annulée.*
- *Possibilité de passer en mode service avec commutation lente active.*
- *AV- Link , la détection WSS, l'EPG et le Vidéotexte ne sont pas validés.*
- *La fonction de stand-by automatique en cas d'absence de signal d'antenne n'est pas validée.*
- *Les valeurs de réglages usine sont affectées au contraste, à la couleur et à la lumière.*
- *Le contour est appelé à sa valeur moyenne.*
- *L'expansion contraste est au niveau bas.*
- *Le mode d'installation et l'ambiance «Light sensor» ne sont pas valdes.*
- *Zoom et format ignorées.*

2 TEMPORARY EXIT FROM SERVICE MODE

- Press Exit on the Remote control.
- Everyday use menu can be accessed via Menu button.

- Field Service Menu can be re-entrered via Blue button.

2 SORTIE TEMPORAIRE DU MODE SERVICE

- Utiliser la touche Exit de la télécommande.
- Le menu utilisateur peut être accessible via la touche «Menu».

- Pour entrer à nouveau dans le mode service utiliser la touche bleue.

3 EXITING FROM SERVICE MODE

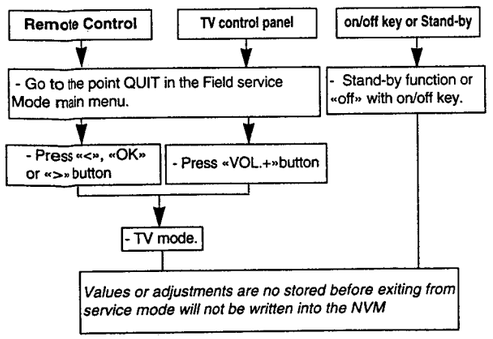

3 SORTIE DEFINITIVE DU MODE SERVICE

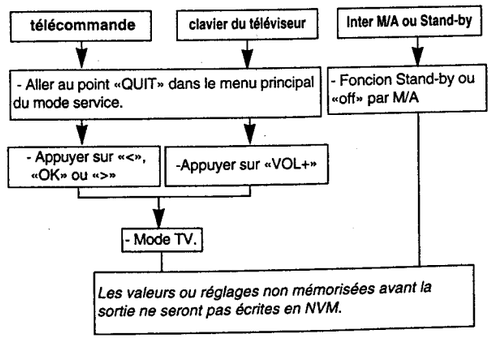

SERVICE - MODE (D) — SERVICE - MODE (I) — MODO SERVICIO

SERVICE - EIN-AUSTIEG SERVICE MODE - ACCESSO/USCITA ALLA/DALLA FUNZIONE - ENTRADA/SALIDA MODO SERVICIO

1 EINSTIEG IN DEN SERVICE MODE

Zugriff über die Tastatur des Fernsehgeräts

Fernsehgerät über die EIN/AUS - Taste ausschalten.
Gleichzeitig die Tasten PR- und VOL- drücken und den TV über die EIN/AUS-Taste einschalten.
Die Tasten PR- und VOL - gedrückt halten.

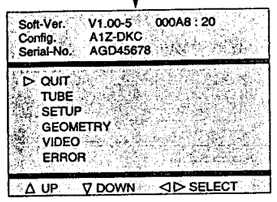

Anmerkung :

Im SERVICE MODE :
- *wird die Sperrfunktion (PIN-Nummer) ignoriert und die Kindersicherung gelöscht (reinitialisiert).*
- *werden alle Ein- und Ausschaltzeitgeber gelöscht.*
- *wird die SCART - Scaltspannung ignoriert.*
- *werden AV- Link WSS, EPG und Teletext gesperrt*
- *wird die Automatische Abschaltung bei fehlendem Antennensignal gesperrt.*
- *werden Kontrast, Farbe und Helligkeit auf standardwerte gesetzt.*
- *wird die bildschärfe auf Mittelstellung (nominal) gesetzt.*
- *wird der Kontrast-Expander auf "gering.." gesetzt.*
- *wird der Installations Modus gesperrt.*
- *wird das Standardformat bzw. der Standard-Zoom-modus gewählt.*

1 ACCESSO AL SERVICE MODO

tramite i comandi del televisore

- Spegnere il TV mediante il pulsante ON/OFF.
- Premere i tasti **PR- e VOL-** accendendo il TV con il pulsante ON/OFF.
- Premere i pulsanti **PR - e VOL -.**

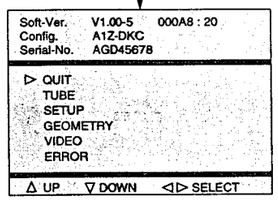

Nota :

Nel service mode:
- *la funzione Blocco (Numero Pin) viene ignorata e la funzione Blocco Bambini è reinizializzata.*
- *Cancellare la programmazione sveglia*
- *Il piedino 8 della scart deve essere ignorato.*
- *I riconoscimenti AV-Link WSS, EPG e televideo deveno essere disabilitati.*
- *Funzione automatica di standby, nel caso di mancanza del segnale d'antenna deve essere disabilitata.*
- *Contrasto, colore, luminosità : regolazioni di fabrica.*
- *Nitidezza: media (nominale)*
- *Espansore contrasto troppo basso.*
- *IModo Install disabilitato.*
- *Formato default e zoom.*

1 ACCESO AL MODO SERVICIO

Acceso panel control TV

- Apague la **TV con el** botón MARCHA:PARAD
- Pulse los botones **PR -** y **VOL -** y sin soltar MARCHA:**PARADA.**
- Libere los botones **PR -** y **VOL -.**

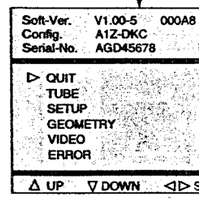

Nota :

En modo servicio:
- *Se ignora la función de bloqueo y se inicial ninos".*
- *Anula todos las horas programadas*
- *La patilla 8 del SCART es ignorada*
- *La detección WSS AV Link, EPG, y Telexto*
- *El apagado automático en caso de ausenc desactivado.*
- *El contraste,color y brillo son puestos a los*
- *la nitidez es puesta al punto medio.*
- *La expansión de contrast al nivel bajo*
- *Modo Instalación es desactivado.*
- *Zoom y formato ignorados.*

2 VORÜBERGEHENDES VERLASSEN DES SERVICE MODE

- Auf der Fernbedienung EXIT drücken.
- Mit der Taste Menü gelangen Sie zum Menü Übersicht

- Mit der blauen Taste gelangen sie zum Service-Menü.

2 USCITA TEMPORANEA DAL SERVICE MODE

- Premere Exit sul telecomando.
- Al menu di uso quotidiano si accede attraverso il pulsante Menu.

- É possibile rientrate nel Menu Field Service attraverso il pulsante Blue.

2 SALIDA TEMPORAL DEL MODO SERVIC

- Pulse Salir en el mando a distancia
- Con el botón **Menu** puede acceder al menú de

- Puede entrar al Menú Servicio con el botón azu

3 ENDGÜLTIGES VERLASSEN DES SERVICE MODE

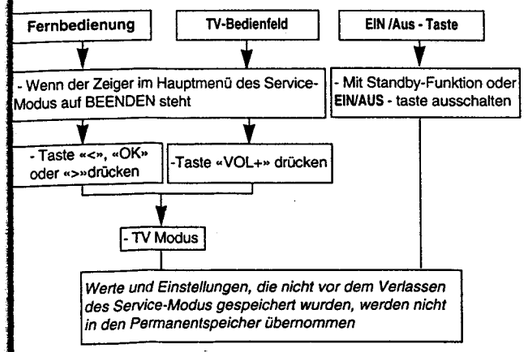

3 USCIRE DAL SERVICE MODE

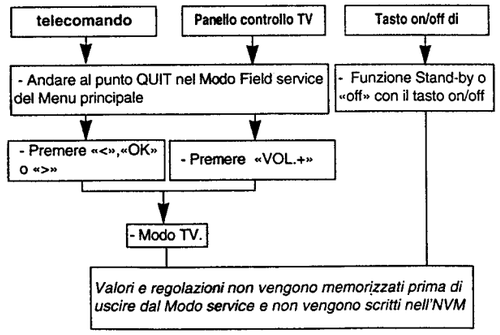

3 SALIDA DEL MODO SERVICIO

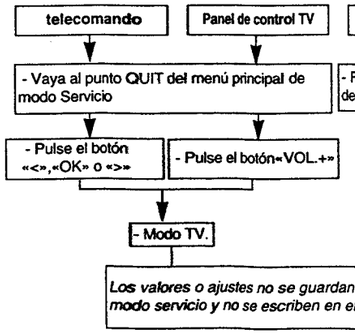

MODO SERVICIO (E)

O SERVICIO

1 ACCESO AL MODO SERVICIO

Acceso panel control TV

- Apague la TV con el botón MARCHA:PARADA.
- Pulse los botones **PR -** y **VOL -** y sin soltarlos,pulsar la tecla MARCHA:PARADA.
- Libere los botones **PR -** y **VOL -** .

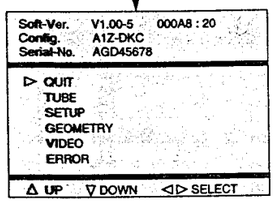

Nota :

En modo servicio:
- Se ignora la función de bloqueo y se inicializa la función "cerradura ninos".
- Anula todos las horas programadas
- La patilla 8 del SCART es ignorada
- La detección WSS AV Link, EPG, y Telexto son desactivados.
- El apagado automático en caso de ausencia de señal de antena es desactivado.
- El contraste,color y brillo son puestos a los valores de fábrica.
- la nitidez es puesta al punto medio.
- La expansión de contrast al nivel bajo
- Modo Instalación es desactivado.
- Zoom y formato ignorados.

2 SALIDA TEMPORAL DEL MODO SERVICIO

- Pulse Salir en el mando a distancia
- Con el botón Menu puede acceder al menú de uso cotidiano.

- Puede entrar al Menú Servicio con el botón azul.

3 SALIDA DEL MODO SERVICIO

telecomando | Panel de control TV | Tecla on/off de

- Vaya al punto QUIT del menú principal de modo Servicio
- Función Stand-by o desconexión (off) con tecla on/off.

- Pulse el botón «<», «OK» o «>»
- Pulse el botón «VOL.+»

- Modo TV.

Los valores o ajustes no se guardan antes de salir del modo servicio y no se escriben en el NVM

II - NAVIGATION INSIDE THE SERVICE MODE - DEPLACEMENT DANS LE MODE SERVICE SUCHE IN SERVICE MODE - OPZIONI NEL SERVICE MODE - BUSQUEDA EN MODO SERVICIO

1 REMOTE CONTROL - TELECOMMANDE - FERNBEDIENUNG TELECOMANDO - MANDO A DISTANCIA

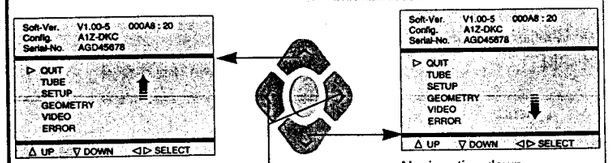

Naviagation up

Naviagation down

- Select option
- Option anwählen
- Selezionare l'opzione
- Seleccionar opción

- "Change" value
- Wert "ändern"
- "Cambiare" valore
- "Cambiar" valor

VALUE

VALUE

2 TV CONTROL PANEL - CLAVIER TV - TASTATUR DES FERNSEHGERÄTS - COMANDI DEL TELEVISORE

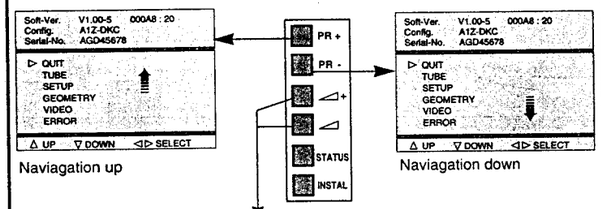

Naviagation up

Naviagation down

- Select option
- Option anwählen
- Selezionare l'opzione
- Seleccionar opción

- "Change" value
- Wert "ändern"
- "Cambiare" valore
- "Cambiar" valor

Vol. + → VALUE

Vol. - → VALUE

Changing page - Changement de page Seitenwechsel - Cambiare Pagina - Cambio de página

End of page
Fin de page
Am Seitenende
Fine della pagina
Fin de página

Beginning of Page
Début de page
Am Seitenanfang
Inzio della pagina
Comienzo de página

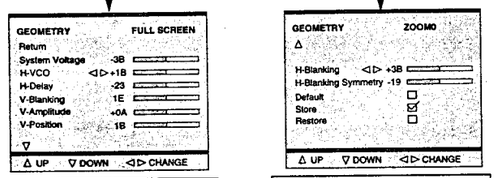

« ∇ »
Indicates a following page
Signifie qu'une page suit.
Bedeutet, daß eine Seite folgt
Indica una pagina seguente
Indica una página siguiente

« Δ »
Indicates a preceding page
Signifie qu'une page précède.
Bedeutet, daß eine Seite vorangeht
Indica una pagina precedente
Indica una página precedente

- The menu turns the page when the cursor reaches the arrow.
- Amener le curseur sur la ligne repérée par « ∇ » ou « Δ » pour passer à la page qui précède ou qui suit.
- Cursor nach « ∇ », « Δ » zum Seitenwechsel
- Il cursor su « ∇ », « Δ » cambia pagina.
- Cursor en « ∇ », « Δ » cambia las páginas

3 DISPLAYING THE VALUE OF THE SETTING - AFFICHAGE DES VALEURS - ANZEIGE DES EINSTELLUNGSWERTS VISUALIZZAZIONE DEL VALORE DELLA REGOLAZIONE VISUALIZACION DEL VALOR DE AJUSTE

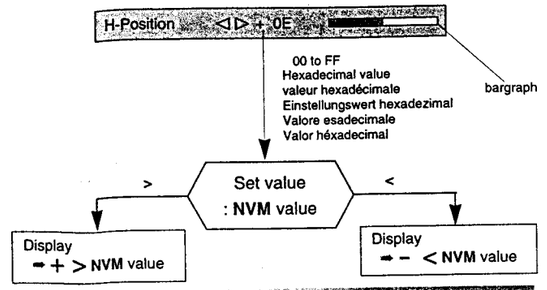

4 TOGGLE FUNCTIONS - VALIDATION DES FONCTIONS EIN-UND AUSSCHALT FUNKTIONEN - FUNZIONI DI COMMUTAZIONE - FUNCION CONMUTACION

To enable a function check (tick) ☒ the box.
Pour valider une fonction cocher ☒ la case correspondante
Zum Implementieren einer Funktion das Kontrollkästchen ☒ aktivieren (ankreuzen)
Per implementare una funzione di verifica, (vistare) ☒ la casella
Para poner en fucionamiento una función verifique (señale) ☒ la casilla

☒ : Implemented function ☐ : No implemented function

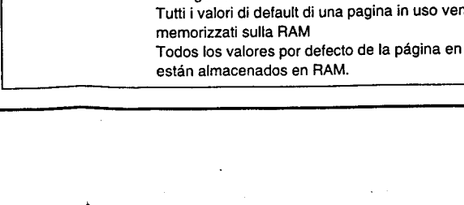

5 STORING VALUES IN MEMORY - MEMORISATION DES VALEURS - SPEICHERN DER WERTE - MEMORIZZAEZIONE I VALORI - VALORES ALMACENADOS EN LA MEMORIA

After setting, the values are stored in NVM.
Après réglages les valeurs sont mémorisées en NVM.
Nach dem Einstellen werden die Werte im NVM gespeichert.
Dopo la regolazione i valori vengono memorizzati in NVM.
Después del ajuste, los valores son almacenados en NVM

The box ☐ becomes ☒
During alignment, values are temporarily stored in RAM.
En cours d'alignement les valeurs sont mémorisées temporairement en RAM
Während des Abgleichs werden die Werte vorübergehend im RAM gespeichert
Durante l'allineamento i valori vengono memorizzati provvisoriamente sulla RAM
Durante el alineamento, los valores son almacenados temporalmente en RAM

Store ➠ Copies RAM values into NVM
Copie la valeur RAM en NVM
Kopieren des Werts von RAM nach NVM
Copiare i valori RAM in NVM
Copiar valores RAM en NVM

Restore ➠ Copies all values from NVM into RAM.
Copie toutes les valeurs des données NVM en RAM
Kopiert alle NVM-Datenwerte in den RAM
Copiare tutti i valori da NVM sulla RAM
Copia todos los valores de NVM a RAM

ROM Default ➠ All the default values of a page in use are stored in RAM.
L'ensemble des valeurs par défaut d'une page courante est chargé en RAM.
Sämtliche Standardwerte der aktuellen Seite werden im RAM geladen
Tutti i valori di default di una pagina in uso vengono memorizzati sulla RAM
Todos los valores por defecto de la página en curso están almacenados en RAM.

III - LITE-MENU FOR FIELD SERVICE MODE - MENUS DU MODE SERVICE

1 MAIN MENU - MENU PRINCIPAL

Software Version / Version software / Software Version / Versione software / Versión software
Counter / Compteur / Zähler / Contador / Contatore

Receiver composition / Composition du Récepteur / Aufbau des Empfängers / Composizione del ricevitore / Composición del Receptor

Serial Number / N° de série / Serien-Nr. / Numero seriale / N° Serie

Alignment / Alignement / Abgleich / Regolazione / Alineacion

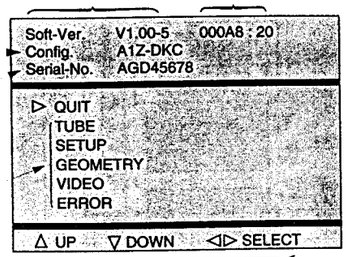

Navigation inside the Service Mode / Navigation dans le Service Mode / Suche im Service Mode / Opzioni del Service Mode / Búsqueda en el Modo Servicio

TV CONFIGURATION - CONFIGURATION DU TV - GERÄTEKONFIGURATION - CONFIGURAZIONE DEL TV - CONFIGURACIÓN Y TV

Config.	A1Z-DKC

Character 1 : Tube type : «A»= 4/3 , «W» =16/9
Character 2 : Chassis type : «5» = 50Hz, «1»= 100 Hz
Character 3 : Zoom available : «Z»=yes, «-»=not
Character 4 : Ambiant Sensor : «S»= detected, «-»= not
Character 5 : Dolby : «D»=detected, «-»= not
Character 6 : AV Link detected : «K»=IR link detected, «-»= not
Character 7 : Password mode: «C»= Password stored, «-»= not

TIME COUNTER - COMPTEUR DE TEMPS - ZÄHLER - CONTATORE - CONTADOR
The counter indicates the TV's number of service hours.It counts from to 0 to 65535 hours. The display is hexadecimal.
Le compteur de temps indique le nombre d'heures de service du TV. Il compte de 0 à 65535 heures. L'affichage est en hexadécimal.
Der Zähler zeigt an, wieviele Stunden der Fernseher in Betrieb ist. Die Anzeige ist hexadezimal.
Il contatore indica il numero di ore di servizio del TV. Puo' contatore da 0 a 65535. La visualizzazione è esadecimale.
El contador indica el número de horas de servicio de la TV. Cuenta de 0 a 65535 horas. El visualizador es hexadecimal.

2 SUBMENU - SOUS-MENU

Change the page / Changement de page / Seitenwechsel / cambio di pagina / cambio de página

Hexadecimal value / Valeur hexadecimale de reglage / Abgleichwerte hexadezimal / Valore di regolazione esadecimale / Valor del ajuste en hexadecimal

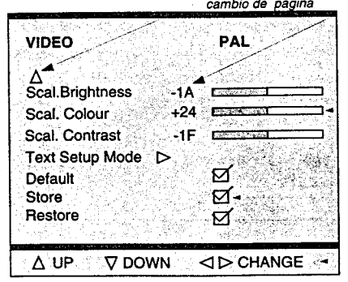

Bargraph / Bargraphe de réglage / Bargraph / Barre grafica di regolazione / Barra gráfica del ajuste

Enable a function / Case de validation - Fonction validée si "cochée" / Zum Implementieren einer Funktion / Per inserire la Funzione / Activar una función

Navigation inside the Service Mode / Navigation dans le Service Mode / Suche im Service Mode / Opzioni del Service Mode

ALIGNMENT PROCEDURE - PROCESSUS DE REGLAGES - ABGLEICH - VISUALIZZAZIONE DEL VALORE DELLA REGOLAZIONE - PROCEDIMIENTO DE ALINEACION

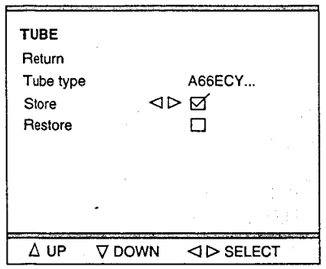

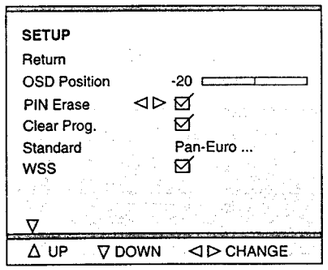

page 1

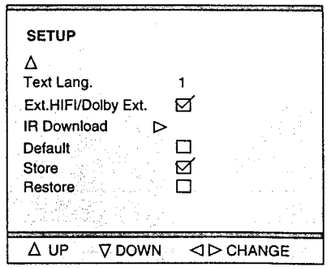

page 2

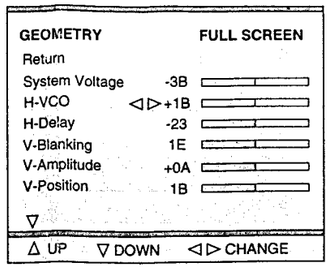

page 1

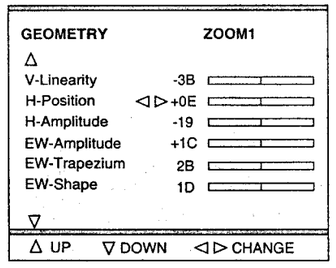

page 2

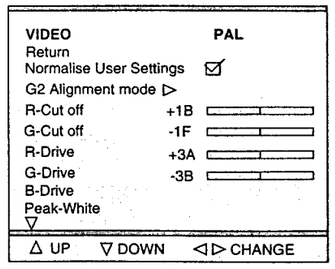

page 1

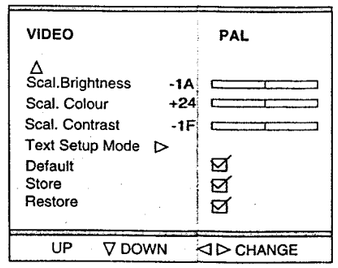

page 2

Test Bar pattern used : 4/3 with geometric circle. Adjust separate for 4/3 and 16/9 format. See annexed

Color standard or RGB is autodetected and displayed opposite the displayed opposite the menu title.

TUBE

Return
Closes the submenu and the main Field Service Mode menu appears.

Retourne au menu principal.

Verlassen des Untermenüs

Chiude il sottomenu e fa apparire il menu principale Field Service Mode.

Cierra el submenú. El menú Field Service Mode aparece.

Press </>: remote control; Vol. +/- : TV keyb.

Tube type

Define the right tube after changing the NVM.
6 characters
New type tube values (with default video and geometry) are immediatly active
Variable geometry and video parameters are put into NVM when the Store feature is selected. See below tube list.

Definit le tube exact après changement de NVM.
Les nouvelles valeurs de tubes (avec video et géometrie) sont actives de suite.
Les paramètres de vidéo et de géométrie sont chargés en NVM lorsque STORE est sélectionné. Voir liste ci-dessous.

Den Bildröhrentyp auswählen.
Die Geometrie-und Videodefault Werte werden sofort in das NVM geladen.
Bildrohrauflistung : siehe unten.

Definire il tubo appropriato dopo aver cambiato il NVM; 6 caratteri I valori per il nuovo tipo di tubo (con video e forma di default) sono immediatamente attivi. I parametri per video e forma variabili vengono immess i nel NVM quando viene selezionata la funzione Store. Si veda la lista dei tubi riportata sotto.

Definir el tubo correcto después de haber cambiado el NVM.6 caracteres.Los nuevos valores de tipo de tubo (con la vídeo y la geometría por defecto) se activan inmediatamente. Los parámetros variables de geometría y vídeo se graban en el NVM al seleccionar la función Store. Vea más arriba la lista de tubos.

Default tube type :

100Hz A66EGW 48X322 : A66EGW
4/3 28"MP, invar, vector gun, BSVM

→ After setting → Store (+) ☑

SETUP

Return
Closes the submenu and the main Field Service Mode menu appears.
Retourne au menu principal.

Verlassen des Untermenüs

Chiude il sottomenu e fa apparire il menu principale Field Service Mode.

Cierra el submenú. El menú Field Service Mode aparece.

Press </>: remote control; Vol. +/- : TV keyb.

OSD Position
Adjusts the position of all Megatext OSD.
Horizontale zentrierung des OSD.

PIN Erase Erases all PINs.
☑ PIN active-Pin aktiv
☐ No PIN active-Kein PIN
Selection : Long press: ≈ 5s
Press </>/OK: remote control;Vol. +/- :TV keyb.
Löschen des PIN Code durch längeres (≈ 5s) drücken der Taste >oder<.
Automatically stored

Clear Prog.
Clears all programms stored in the memory.
Analogues values SOUND PICTURE : factory values.
Return the TV to "out of factory mode.
Selection : Long press:2,5s

Efface tous les programmes mémorisés.
valeurs SON et IMAGES: valeurs usines.
Pour sortir des valeurs usine :
Selection : Long press:2,5s

Setzt das Gerät in die Werksgrundeinstellungen.
Es erscheint nach dem erneuten.
Einschalten das Installationsmenü.

Clear Prog.
Cancella tutti i programmi in memoria.Valori analogici SUONO IMMAGINE:valori di fabbrica.
Riportare la TV al modo Selezione: pressione prolungata: 2,5 sec.

Programa de borrado.
Borra todos los programas almacenados en la memoria.Valores análogos de SOUND PICTURE: valores de fábrica.Regreso a la TV para "salir del modo fábrica".Selección: Presión larga igual a 2,5 s.

☑ active-aktiv ☐ No active-inaktiv

Standard "Pan-Euro" or "I".
BG PAL SECAM,L SECAM (France),
DKK' SECAM,NTSC M,I PAL (UK/IRELAND)

WSS Detection "auto-surround" and "format" via Teletext line 23.
Selection of WSS Processing is valid for all programs.
Sélection du process WSS valid pour tous programmes

WSS (nur bei 16:9 oder Dolby)
Auswertung der Zeile 23 zur automatishen Format-umschaltung und Dolby-umschaltung

Rivelazione "auto-surround" e "format" via televideo alla riga 23.La selezione di WSS Processing vale per tutti programmi.
La selezione di WSS Processing vale per tutti programmi.

Detección "auto-surround" y "format" a través de la línea 23 de Teletext.La selección del procesamiento WSS es válida para todos los programas.La selección del procesamiento WSS es válida para todos los programas.

☑ detect.enable- aktiv ☐ disable-inaktiv

SETUP

Text. Lang. Teletext language :

0	1	2	3
English	Polish	English(US)	English
German	German	German	German
Swedish	Swedish	Swedish	Swedish
Italian	Italian	Italian	Italian
French	French	French	French
Portug.	Serbocroat	Portug.	Portug.
Czech/Slov.	Czech/Slov.	Czech/Slov.	Turkish.
-	Rumanian	English(UK).	-

EXT.HIFI / Dolby Ext.

Dolby Internal Not available on Normal Sound TV's
Nur bei Dolby TV.
☑ Dolby with External Loudspeaker.
Dolby mit ext.Lautsprechern
☐ Dolby with Internal Loudspeakers.
Dolby mit int. Lautsprechern

External HIFI Not available on Dolby TV's
Bei nicht Dolby TV
☑ External HIFI control
Einstellung der Lautstärke int.Lautsprecher
☐ Normal sound control
Einstellung der Lautstärke der Cinchbuchsen (HIFI Anlage)

IR Download

Download screen for receiving mapping via IR data.

Ecran de chargement pour réception "mapping" via IR data

Herunterladen des Programmschemas per IR.

Trasferimento IR
Trasferire schermo per ricezione mappatura via dati IR

Descarga de IR
Pantalla de descarga para recibir el mapeado a través de los datos IR.

IR Download
Programme 00
Return / Abort ◁

IR Download active

"programme 00" : function is active or finished.
Return / Abort : To exit/Abort the menu
press "left" arrow key or Volume - key of keyboard.

All other IR commands have no response.

Toutes les autres commandes IR sont sans réponse;

Es gibt auf IR Kommandos keine Reaktion.

Tutti gli altri comandi IR sono senza risposta

Los otros comandos IR no envían respuesta.

→ After setting → Store (+) ☑

GEOMETRY

Return
Closes the submenu and the main Field Service Mode menu appears.
Retourne au menu principal.

Verlassen des Untermenüs

Chiude il sottomenu e fa apparire il menu principale Field Service Mode.

Cierra el submenú. El menú Field Service Mode aparece.

Press </>: remote control; Vol. +/- : TV keyb.

System Voltage
Adjustment of the system voltage Usys.
Only possible via the local keyboard Vol +/- .
Einstellung nur über die Bordbedienung möglich (Lautstärke +/-)

TUBE NAME	DESCRIPTION	Usys
A66EGW 48X322	4/3 28" MP	134V +/- 0.5V
A59EGD048X322	4/3 25"SF	137V +/-0.5V
A68EGD038X322	4/3 29" SF	137V +/-0.5V
A68EES038X322	4/3 29" SF	137V +/- 0.5V
W66EGV023X122	16/9 28" SF	134V +/- 0.5V
W76EGV023X122	16/9 32"SF	134V +/-0.5V
W66EGV023X122	16/9 32"SF	134V +/- 0.5V

H-VCO Horizontal - VCO oscillator.

Adjust H_VCO until the speed of the unsynchronised picture gets the slowest.

Agir sur H-VCO pour obtenir une image la plus proche de la synchronisation

Den H-VCO auf Schwebung einstellen.

Regolare l'H_VCO finché l'immagine non sincronizzata non avrà raggiunto la velocità minima.

Ajuste H_VCO hasta que la imagen no sincronizada alcance su velocidad más baja.
default value = 0FH
Press </>: remote control; Vol. +/- : TV keyb.

H-Delay — Horizontal delay
Use "+" and "-" to adapt the image

V-Blanking
1-V-amp. pre-align: > 7% overscan
2- Reduce V-blanking: visible on top & bottom
3-Increase step/step:blank. at the bottom and cut- off lines at the top disappear
4- Increase one more step
5- Fine adjust V-amp. and V-position

1-V-amp. ampl.vertic. suffisante (>7% overscan)
2- réduire V-blanking:visible en haut et bas.
3-Agir étape par étape jusqu'à disparition du blanking en bas d'image et des lignes de cut-off en haut d'écran
4- Augmenter d'une valeur.
5- Faire un réglage fin de V-amp. et V-position

1-V-Position und V-Amplitude optimal einstellen (V-amp. vorabgleich: >7% Überschreibung.)
2- V-Blank soweit verändern, daß am oberen und unterern Bildrand gerade eine Austastung sichtbar wird.
3-Den Wert von-Blank um 2 steps erhöhen (2 x die + Taste drücken).

1- Ampiezza verticale: grande a sufficienza (7% di sovrascanzioni)
2- Riduzione della soppressione verticale: visibile in alto e in basso
3- Aumentare passo/passo: vuoto in basso per veder scomparire le linee di interdizione in alto
4- Aumentare ancora di un passo
5- Regolare con precisione l'ampiezza e la posizione verticali

1- Amplitud V: suficientemente grande (7% de sobreexploración)
2- Reducir el parpadeo V: visible en las partes superior e inferior.
3- Aumentar el paso a paso: el vacío en la parte inferior y las líneas de corte en la parte superior desaparecen.
4- Aumentar de otro paso.
5- Ajustar finamente la amplitud V y la posición V.

V-Amplitude
V-Position

→ After setting → Store (+) ☑

GEOMETRY

V-Linearity

H-Position

H-Amplitude

EW - Amplitude

EW - Trapezium

EW -Shape

GEOMETRY ZOOM0

Default ☐
Store ☑
Restore ☐

△ UP ▽ DOWN ◁▷ CHANGE

page 3

→ After setting → Store (+) ☑

VIDEO PAL

Return
Closes the submenu and the main Field Service Mode menu appears.
Retourne au menu principal.

Verlassen des Untermenüs

Chiude il sottomenu e fa apparire il menu principale Field Service Mode.

Cierra el submenú. El menú Field Service Mode aparece.

Press </>: remote control; Vol. +/- : TV keyb.

Normalise User Settings

Recalls the factory settings for colour, brightness, contrast and sharpness and sets contrast expand to "low".
☑ Factory settings recalled
☐ User settings kept.

G2 Alignment
Display a special menu:
Adjust R-Cut off and G-Cut off to 80H temporary.

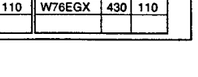

RGB cutoff counters

Adjust the lowest value with SCREEN potentiometer to: see table
Es erscheint folgendes Menu. Die R-und G-Cut off Werte für diese Einstellung temporär auf 80H einstellen. den kleinsten angezeigten Wert mit dem Schrmgitterensteller auf entsprechenden. wert in der Tabelle abgleichen.

Tube Type	Value	Tube Type	Value
A66EGW	60H	W76EGX	60H
A59EGD	50H	A80EDM	60H
A68EGD	50H	A90AFF	50H
W66EGV	50H	RP 4 / 3	-
W76EGV	60H	RP 16 / 9	60H

To return video submenu:
Press </>/OK: remote control;Vol. +/- :TV keyb.
Select"Restore" to restore the cut off values.

R-Cut off* / **G-Cut off*** — ☼+◑+◑=nom. Grey scale test pattern white =100% (grey)

R - Drive / **G - Drive** / **B - Drive** — ☼+◑+◑=nom. Grey scale test pattern white =100% (white)

Peak-White** — ☼+◑+◑=nom. Peek white test pattern white =100%

CRT Pin 6,8,11

Blue cathode ↓ Blue cathode ↓

Tube Type	[init]	[Vpp]	Tube Type	[init]	[Vpp]
A59EGD	470	110	A90AFF		
A66ECY	350	110	W66EGV	550	110
A66EGW	425	110	W76EGV	430	110
A68EGD	400	110	W76EGX	430	110
A80EDM					

VIDEO PAL

Scal. Brightness — ☼+◑ = 50%; ◑ = 100%; Grey scale test pattern white =100% (black)

Scal*. Colour — ☼+◑+◑=nom. PAL (then SECAM +RGB) 75% Colour bar test pattern via RF.

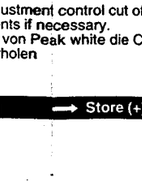

Scal. Contrast — factory settings.

Text Set-up Mode — ☼+◑+◑=nom. Set Text Contr. to max. ! Adjust Text Gain to get a light output of just ≥40% of OMA peak withe. Fine-adjust with Text Contr. to 40% of light output of OMA Peak White.

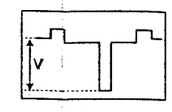

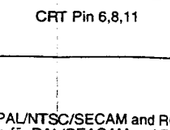

CRT Pin 6,8,11

Note :
* adjust separate for PAL/NTSC/SECAM and RGB/AV getrennte Einstellung für PAL/SEACAM und RGB/AV
* * After PEAK white adjustment control cut off setting. Repeat the adjustments if necessary.
nach der Einstellung von Peak white die Cut off Einstellungen wiederholen

→ After setting → Store (+) ☑

TUBE NAME	LIST	DESCRIPTION	tube type
A66EGW 48X322	A66EGW	4/3 28" MP, invar,vector gun, BSVM	10,100Hz
A59EGD048X322	A59EGD	4/3 25" SF,invar,vector gun, BSVM	11,100Hz
A68EGD038X322	A68EGD	4/3 29" SF, invar,vector gun, BSVM	12,100Hz
A68EES038X322	A68EES	4/3 29" SF , invar, COTY MDF gun, BSVM	12,100Hz
W66EGV023X122	W66EGV	16/9 28" SF , invar , vector gun , BSVM	13,100Hz
W76EGV023X122	W76EGV	16/9 32"SF, invar , vector gun, BSVM	14,100Hz
W76EGX023X122	W76EGX	16/9 32"SF, invar , COTY MDF gun , BSVM	14,100Hz

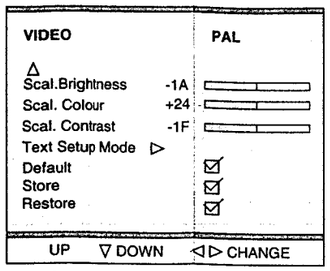

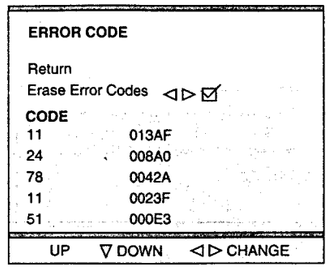

displayed opposite the displayed opposite the menu title.

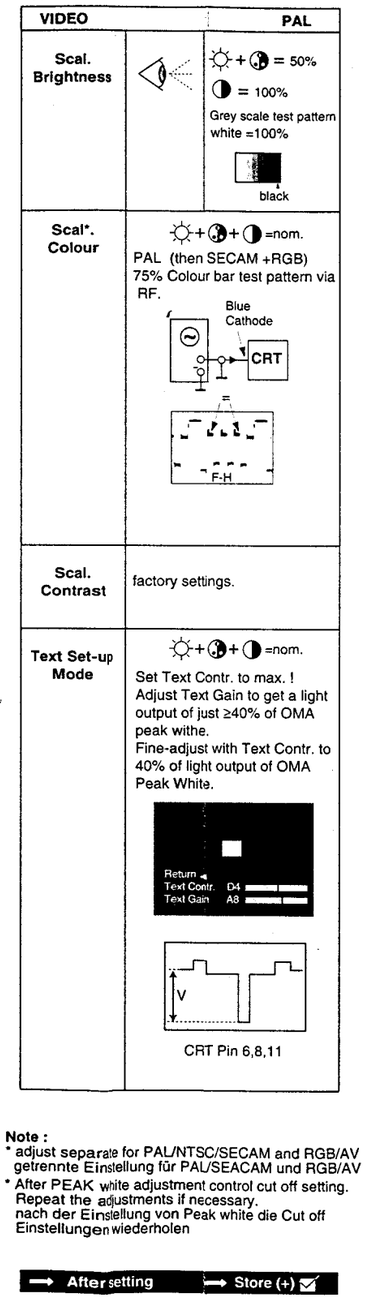

Note :

* adjust separate for PAL/NTSC/SECAM and RGB/AV
getrennte Einstellung für PAL/SEACAM und RGB/AV

* * After PEAK white adjustment control cut off setting.
Repeat the adjustments if necessary.
nach der Einstellung von Peak white die Cut off Einstellungen wiederholen

→ After setting → Store (+)

ERROR CODE

Return

Closes the submenu and the main Field Service Mode menu appears.
Retourne au menu principal.

Verlassen des Untermenüs

Chiude il sottomenu e fa apparire il menu principale Field Service Mode.

Cierra el submenú. El menú Field Service Mode aparece.

Press </>: remote control; Vol. +/- : TV keyb.

Erase Error Codes Clears all error codes storedin the NVM.Long press action (2.5s) :
Durch längeres Drücken der >oder< Taste werden die Error Codes gelöscht.
Press </>/OK: remote control;Vol. +/- :TV keyb.

CODE LED Error Codes

Store the last five different error codes when each occured (via runtime counter) .The more recent error is displayed on top.A repeat of the error code on the top of the list just updates the runtime. 27 different error codes are signalled from the TV LED :11 to 44.
The error code is signalled as two separate digits with a suitable pause in-between and will repeat until the TV is fixed or fixes itself.

e.g. Error-code : 23 will be displayed :
2 flashes, short pause
3 flashes, long pause .....
List of Errors Codes : see table

Mémorise les cinq derniers codes erreurs et affiche en haut d'écran les plus récents.
27 codes erreurs différents sont signalés par 2 digits selon une séquence spécifique
Exemple :
Code erreur : 23 affiché
2 flashes, courte pause
3 flashes : longue pause
.....
Voir ci-contre la liste des codes erreurs

Zeigt die letzen 5 Fehlercodes mit der Laufzeit an. Der zuletzt aufgetretene Fehler steht an erster Stelle.
Sollte ein Fehler wiederholt auftreten wird nur die Laufzeit aktualisiert.
Die Fehlercodes können im Menü Error Code angezeigt werden oder über die Kontroll LED angezeigt werden;

Beispiel für die Anzeige über die Kontroll LED :

Fehlercode 23
Zweimaliges Blinken der LED, kurze Pause
Dreimaliges Blinken der LED, lange Pause.
Auflistung der Fehlercodes : siehe Liste

Memorizzare gli ultimi cinque codici d'errore (differenti tra loro) dopoche ognuno di essi si sarà presentato (attraverso il contatore della durata di esecuzione). L'errore più recente viene visualizzato in cima. La ripetizione del codice di errore in cima alla lista non farà altro che aggiornare la durata di esecuzione.Dal LED della TV vengono segnalati 27 codici d'errore differenti, numerati da 11a 44. Il codice d'errore è indicato da due cifre separate da un opportuno intervallo di tempo e verrà ripetuto fino a quando il televisore non sarà stato riparato o non si sarà corretto da solo. Ad es:
Il codice d'errore 23 visualizzerà:
2 segnali luminosi con pausa breve
3 segnali luminosi con pausa lunga
Per la lista dei Codici d'Errore, si veda la tabella

Almacene los últimos cinco códigos de error cuando cada uno ocurre (gracias al contador de tiempo de ejecución). El error más reciente se visualiza en la parte superior. Una repetición del código de error en la parte superior de la lista solamente actualiza el tiempo de ejecución El indicador TV LED indica 27 códigos de error diferentes: de 11 a 44. El código de error se señala en forma de dos dígitos separados con una pausa apropiada entre los dos y se repetirá hasta que repare el TV o él se repara a sí mismo
Por ejemplo,Se va visualizar el código de error 23:
2 parpadeos, una pausa corta;
3 parpadeos, una pausa larga.
Para la Lista de códigos de error, consulte la tabla.

ERROR CODES

GB

11 1st Audio_MSP doesn't answer
12 2nd Audio-MSP doesn't answer
13 Audio-DSP doesn't answer
14 Video IC STV2161/2 doesn't answer
15 Chroma IC 2151/9143 doesn't answer
16 Upconverter DMU0 doesn't answer
17 Audio (or Dolby) module not detected
18 SCART IC TEA6415C doesn't answer
19 Tuner CTT5000 doesn't answer
21 I2C Bus1 data line held low
22 I2C Bus2 data line held low
23 I2C Bus1 clock line held low
24 I2C Bus2 clock line held low
25 Switched 5V not available
26 Tube doesn't gets warm in time
27 Deflection detects >3 times protection (problem detected on "breathing" line)
29 DRAM memory of Megatext defect
33 The PSI chip (STV2165) doesn't answer
34 The NVM (X24C32) chip doesnt answer
35 13V not available
37 Unexpected level on NMI (Interrupt) line found (possible cause : tube flashover)
38 M3LBus for Megatext is blocked
39 Megatext (SDA5273) doesn't answer
41 bus1 (data line) not recoverable
42 bus2 (data line) not recoverable
43 MCU (Motion Mastering Up-Converter) doesn't answer
44 Convergence IC (Rear Projector) doesn't answer

F

11 Processeur Audio MSP ne répond pl
12 Deuxième MSP ne répond plus (Dolt
13 Audio-DSP ne répond plus (produit D
14 Video-IC STV2161 ou 2162 ne répor
15 Chroma-IC STV2151 ou TDA9143 ne d plus
16 Convertisseur de frequence d'image DMU0 (Intelligent Mastering) ne répond plus
17 Module son (ou Dolby) n'est pas déte
18 Commutateur SCART TEA6415C ne d plus
19 Tuner CTT5000 ne répond plus
21 I2C-bus 1 data bloqué au niveau bas
22 I2C-bus 1 clock bloqué au niveau ba
23 I2C-bus 2 data bloqué au niveau bas
24 I2C-bus 2 clock bloqué au niveau ba
25 Le "5V commuté" n'est pas disponibl
26 Tube ne chauffe pas a temps
27 Plus que 3-fois la déflection a détecte "protection" (c'est-a-dire qu'il y a un pe détecté sur la ligne "breathing")
29 Mémoire (DRAM) du Megatext est en
33 STV 2165 (PSI 100Hz) ne répond plu
34 NVM (mémoire) X24C32 ne répond p
35 +13V n'est pas disponible
37 Problème détecté sur la ligne "Interrndant le démarrage ou le fonctionnement Possibilité: "arking"?
38 Bus M3L pour Megatext est bloqué
39 Megatext (SDA5273) ne répond plus
41 I2C-bus 1 data reste blocqué
42 I2C-bus 2 data reste blocqué
43 MCU (convertisseur de frequence d'idigital: Motion Mastering) ne répond plus
44 CI Convergence ne répond plus (rétrcteur)

D

11 Audio MSP Prozessor antwortet nicht.
12 Zweiter Audio MSP Prozessor antwortet nicht.(Dolby)
13 Audio DSP Prozessor antwortet nicht. (Dolby)
14 IC STV2161/62 antwortet nicht
15 IC STV2151 / TDA9143 antwortet nicht
16 DMU0 Upconverter (Videomodul) antwortet nicht
17 Audio- oder Dolby-modul nicht erkannt
18 TEA6415C antwortet nicht (SCART Schalter)
19 Tuner CTT5000 antwortet nicht
21 I2C Bus1 data line ist auf low
22 I2C Bus2 data line ist auf low
23 I2C Bus1 clock line ist auf low
24 I2C Bus2 clock line ist auf low
25 Geschaltete 5V nicht vorhanden
26 Röhre wird nicht rechtzeitig warm
27 Ablenkung meldet 3 mal Fehler. (Problem auf Breathing Leitung)
29 DRAM des Megatext defekt
33 STV 2165 (PSI 100Hz) antwortet nicht
34 NVM Chip antwortet nicht (X24C32)
35 +13V nicht vorhanden
37 Unerwarteten Zustand an NMI (Interrupt) line gefunden. (Mögliche Urasache = Röhren Überschlag")
38 M3L Bus des Megatext blockiert
39 Megatext (SDA 5273) antwortet nicht
41 Bus1 (data line) nicht möglich zu reaktivieren
42 Bus2 (data line) nicht möglich zu reaktivieren
43 MCU (Motion Mastering Up-Converter) antwortet nicht
44 Konvergenz IC antwortet nicht (Rear-Projektor)

I

11 Primo Audio MSP non risponde piú
12 Secondo Audio MSP non risponde p
13 Audio DSP non risponde piú
14 2161/2 non risponde piú
15 2151/9143 non risponde piú
16 Il convertitore non risponde piú
17 Modulo Audio non trovato
18 TEA6415C non risponde piú
19 Il sintonizzatore non risponde piú
21 Linea I2C bus dati 1 mantenuta bas
22 Linea I2C bus dati 2 mantenuta bas
23 Linea I2C bus temporizzatore 1 man bassa
24 Linea I2C bus temporizzatore 2 man bassa
25 Commutazione 5V non disponible
26 Il tubo non si riscalda in tempo
27 La deflezion ha rilevato piú
29 Difetto alla DRAM di Megatext
33 Il chip PSI non risponde piú
34 Il chip NVM non risponde piú
35 13V non disponible
37 Livello imprevisto sulla linea NMI
38 Bus M3L per Megatext bloccato
39 Megatext non risponde piú
41 Bus 1 (linea dati) non ripristinabile
42 Bus 2 (linea dati) non ripristinabile
43 MCU non risponde
44 Convergenza IC non risponde

E

11 Procesador de audio MSP no responde
12 Segundo MSP no responde (Dolby)
13 Audio DSP no responde
14 Cir. integrado de video STV2161 ó 2162 no responde
15 Cir. integrado croma ST2151 ó TDA9143 no responde
16 Convertidor de frecuencia de imagen digital DMU0 (Mastering Inteligente) no responde
17 Módulo de sonido (o Dolby) no se detecta
18 Conmutador Scart (TEA6415C) no responde
19 Tuner CTT5000 no responde
21 Data 1 del bus I2C permanece en bajo
22 Clock 1 del bus I2C permanece en bajo
23 Data 2 del bus I2C permanece en bajo
24 Clock 2 del bus I2C permanece en bajo
25 No se dispone de los "5v conmutados"
26 El tubo tarda en calentarse
27 La protección de la deflexión actúa mas de 3 veces (el problema se detecta en la línea de "breathing")
29 La memoria DRAM del Megatext está defectuosa
33 El chip STV2161 (PSI 100Hz) no nde
34 La memoria no volátil X24C32 no nde
35 No están disponibles los + 13 v.
37 Problema detectado en la línea "pt" durante el arranque o el funcionao del TV.Posibilidad de chispazos y alta?
38 El bus M3L para el Megatext est eado
39 Megatext (SDA5273) no respond
41 Data 1 del bus I2C permanece b do
42 Data 2 del bus I2C permanece b do
43 MCU (convertidor de frecuencia agen digital: Motion Mastering) no res
44 Cir. integrado de covergencia no nde (retroproyectores)

GEOMETRY MODE ALIGNMENT - 100Hz VERSION

4/3 picture tube

Signal : 4/3 test pattern

4 / 3 standard mode zoom 0	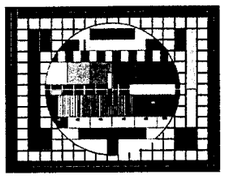	**100Hz Version** : overscan V=107% , H=107% 1- Adjust Vertical position and Vertical amplitude 2- Adjust Vertical Blanking and linearity 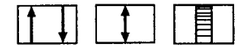 3- Adjust Horizontal position and Horizontal amplitude 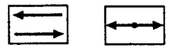 4-Adjust EW Amplitude ,EW Shape and Trapezium 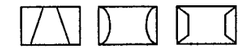
<4/3> zoom 1	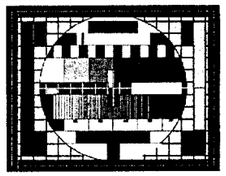	**100 Hz Version** : overscan V=120% , H=120%
16 / 9 standard mode zoom 0	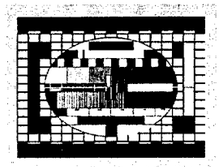	Adjust the vertical height until V = 80%
<16 / 9> zoom 1	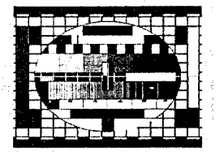	Adjust the vertical height : V =90%

16/9 picture tube

Signal : 4/3 test pattern

16 / 9 standard mode zoom 0	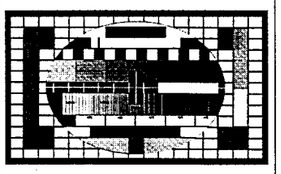	**100Hz Version** : overscan V=107%, H =107% 1- Adjust Vertical position and Vertical amplitude 2- Adjust Vertical Blanking and linearity 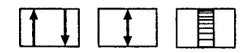 3- Adjust Horizontal position and Horizontal amplitude 4-Adjust EW Amplitude ,EW Shape and Trapezium 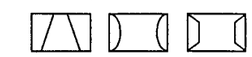

MAIN BOARD - PLATINE PRINCIPALE - CHASSIS GRUNDPLATTE - PIASTRA PRINCIPAL - PLATINA PRINCIPAL

COMPONENT SIDE - COTE COMPOSANTS - BESTÜCKUNGSSEITE - LATO COMPONENTI - LADO COMPONES

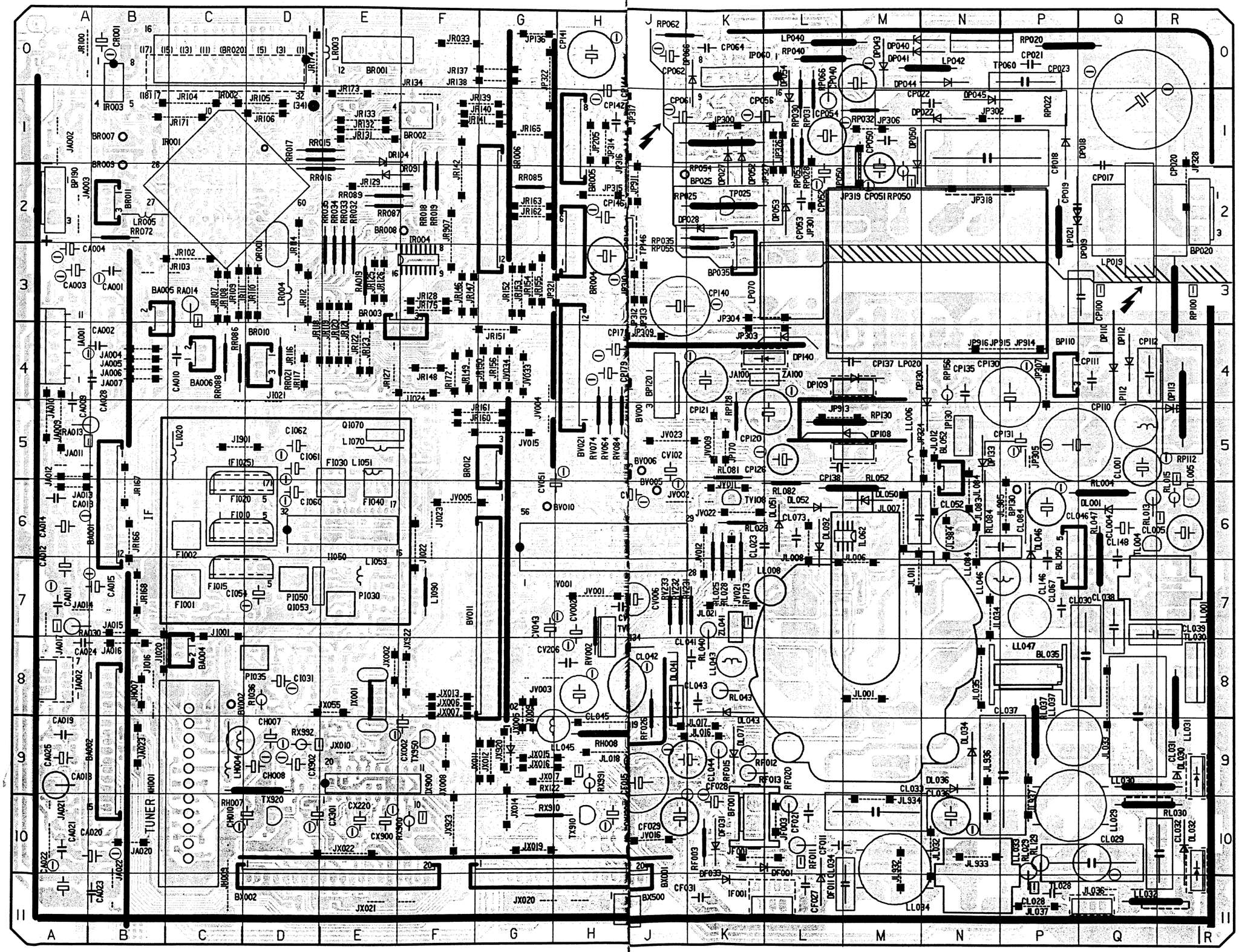

SOLDER SIDE

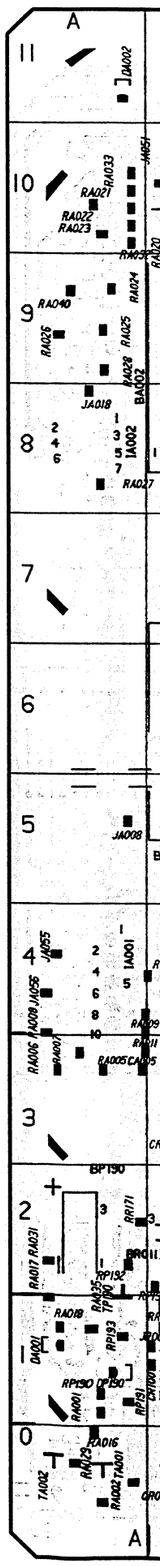

SOLDER SIDE - CÔTE SOUDURES - LÖTSEITE - LATO SALDATURE - LADO SOLDADURAS

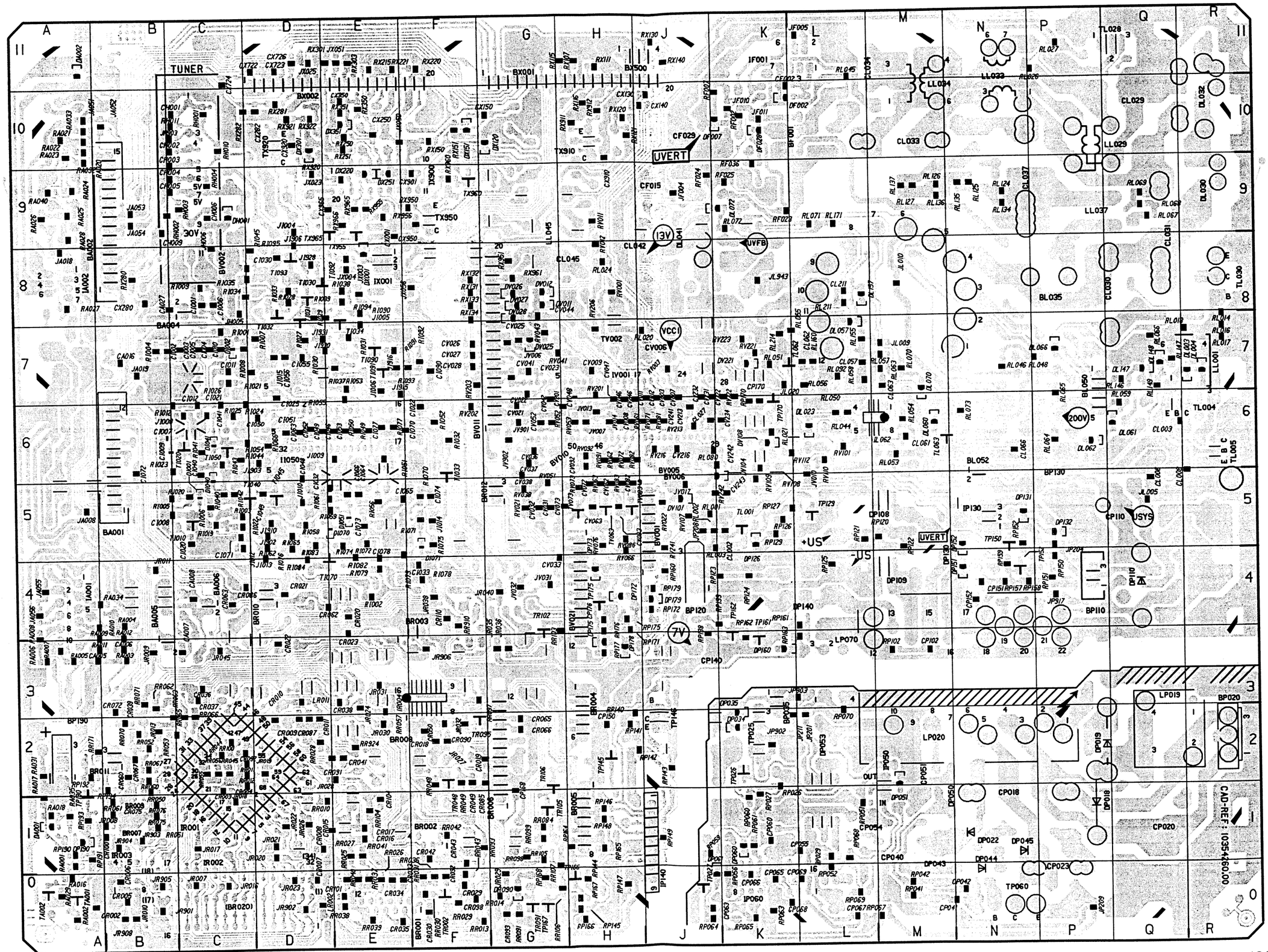

ICC19 100 Hz
First issue 09 / 97

COMPONENTS LOCATION - LOCALISATION DES ELEMENTS - LAGE DER BAUTEILE - LOCALIZZAZIONE DEGLI ELEMENTI - LOCALIZACION DE LOS COMPONENTES

* SOLDER SIDE - COTE CUIVRE - LÖTSEITE - LATO SALDATURE - LADO DEL COBRE

1	2	3

BA001	B6
BA002	B9
BA004	C8
BA005	B3
BA006	C4
BF001	K10
BL035	P8
BL050	P6
BL052	N5
BP020	R2
BP025	J2
BP035	K3
BP110	P4
BP120	J4
BP130	P6
BP190	A2
BR001	E0
BR002	F1
BR003	F4
BR004	H2
BR005	H1
BR006	G2
BR007	B1
BR008	F2
BR009	B2
BR010	D4
BR011	B2
BR012	G5
BV001	J5
BV002	C8
BV005	J6
BV006	J5
BV010	G6
BV011	G7
BV021	H4
BX001	H11
BX002	E11
BX500	J11

CA001	B3
CA002	B4
CA003	A3
CA004	A3
CA005*	B3
CA006*	B3
CA007*	C 3
CA008*	C 4
CA009	A 5
CA010	C 4
CA011	A 7
CA012	A 7
CA013	A 6
CA014	A 6
CA015	B 7
CA016*	B7
CA018	A9
CA019	A9
CA020	B10
CA021	A10
CA022	A11
CA023	B11
CA024	A8
CA025	A9
CA027*	C8
CA028	B4
CF002*	K10
CF011	L10
CF015	J9
CF021	L10
CF027	L11
CF028	K10
CF029	J10
CF031	K11
CH001*	C10
CH002*	C10
CH003*	C10
CH004*	C9
CH005*	C9
CH006*	C9
CH007	D9
CH008	D9
CH009*	B9
CH010	D10
CI001*	C8
CI002*	B7
CI003*	C7
CI004*	C7
CI005*	C7
CI006*	C8
CI007*	B6
CI008*	C5
CI009*	C6
CI010*	C7
CI011*	C7
CI012*	C6
CI020*	C5
CI021*	C6
CI022*	F6
CI025*	D7
CI030*	D8

CI031	D8
CI032*	E5
CI033*	F4
CI040*	C6
CI041*	C6
CI045*	D5
CI046*	E6
CI048*	D6
CI049*	D6
CI050*	D6
CI051*	D6
CI052*	D6
CI053*	E6
CI054	D7
CI055*	D7
CI056*	D7
CI060	D6
CI061	D5
CI062	D5
CI063*	D6
CI064 *	E5
CI065*	E5
CI066*	E5
CI070*	F6
CI071*	C5
CI072*	B6
CI073*	E5
CI074*	F5
CI077*	E6
CI078*	E4
CI090*	F7
CL001	Q5
CL002*	K5
CL003*	Q6
CL004	Q6
CL005	R6
CL006*	Q5
CL008*	R5
CL023	L6
CL027*	J6
CL028	P11
CL029	Q10
CL029	Q10
CL030	Q8
CL031	Q8
CL032	R10
CL033	M10
CL034	M11
CL036	N10
CL037	P9
CL038	Q7
CL039	R7
CL041	K8
CL042	J8
CL043	K8
CL044	K9
CL045	H8
CL046	P6
CL052	M6
CL057*	L7
CL061*	M6
CL062*	L7
CL063*	M7
CL066*	N6
CL067	P7
CL073	L6
CL084	P6
CL146	P6
ICL148	Q6
CL211*	L8
CP017	Q1
CP018	N1
CP019	Q 2
CP020	Q 1
CP020	Q1
CP021	P0
CP022	N1
CP023	P0
CP040	M0
CP041*	N0
CP042*	N0
CP050	M1
CP051	M2
CP052	L2
CP053	L2
CP054	L1
CP055*	L1
CP056	L1
CP060*	K1
CP061	J1
CP062	J0
CP063*	J0
CP064	K0
CP065*	K0
CP066*	K0
CP067*	L0
CP068*	K0
CP069*	L0
CP100	P3
CP100	Q3
CP102*	M3
CP110	P5
CP111	Q4
CP112	Q4
CP120	L5

CP121	K4
CP126	L5
ICP130	P4
CP131	P5
CP135	N4
CP137	M4
CP138	L5
CP140	J3
CP141	H0
CP142	H1
CP143	H 3
CP144	H1
CP146	H2
CP150*	H2
CP151*	N4
CP152*	N4
CP168*	G1
CP170*	K6
CP171	H4
CP176*	H4
CP179	H4
CR001	B0
CR002*	A0
CR003*	C2
CR004*	C2
CR005*	B0
CR006*	B0
CR007*	D0
CR008*	D1
CR009*	D2
CR010*	D2
CR011*	D2
CR015*	D1
CR016*	E1
CR017*	E1
CR018*	F2
CR019*	F2
CR020*	E4
CR021*	D4
CR022*	D3
CR023*	E4
CR029*	F0
CR030*	F0
CR032*	F0
CR033*	E0
CR034*	E0
CR035*	E0
CR036*	C3
CR037*	C3
CR038*	E3
CR039*	B2
CR041*	E2
CR042*	F1
CR043*	F1
CR049*	F2
CR050*	F2
CR060*	B2
CR062*	D4
CR063*	C4
CR065*	G2
CR066*	G2
CR067*	B2
CR072*	B3
CR075*	B1
CR085*	F2
CR086*	C4
CR087*	D2
CR090*	F2
CR091*	E2
CR092*	C2
CR093*	G0
CR098*	F0
CR100*	B1
CR101*	E0
CR104*	E1
CR110*	F4
CV002	H7
CV003	J6
CV006	J7
CV007*	J6
CV008*	H 6
CV009*	H7
CV011*	J6
CV012*	J6
CV021*	G6
CV022*	G7
CV023*	G7
CV025*	G7
CV026*	F7
CV027*	F7
CV028*	F7
CV031*	G5
CV032*	G5
CV033*	G4
CV036*	G6
CV037*	G6
CV038*	G6
CV041*	G7
CV042*	G6
CV043	G7
CV044*	G8
CV046*	H6
CV047*	H6
CV048*	H7
CV051	H6

CV052*	G6
CV062*	H5
CV063*	H5
CV072*	H5
CV073*	H5
CV082*	H5
CV083*	H5
CV092*	H6
CV102	J5
CV103	J6
CV201*	H6
CV206	H8
CV207	H7
CV213*	J6
CV216*	J6
CV222*	K6
CV231*	J6
CV232*	J6
CV234*	K6
CV241*	J6
CV242*	K6
CV243*	K5
CV246*	H6
CX001*	E9
CX002	F9
CX120	H10
CX130*	J10
CX140*	J10
CX150*	G10
CX220	E10
CX250*	E10
CX280*	B8
CX282*	D10
CX301	D10
CX350*	E10
CX722*	D11
CX723*	D11
CX724*	C11
CX726*	D11
CX900	E10
CX901*	F9
CX902	D9
CX910*	H10
CX920*	D10
CX950*	F9
CX965*	E9

DA001*	A1
DA002*	A11
DF001	K10
DF002*	K10
DF007*	K10
DF011	L11
DF028*	K10
DF031	K10
DF033	K11
DH001*	C9
DI001*	C5
DI002*	C 7
DI040*	C6
DI041*	C6
DI051*	E5
DI070*	E5
DI071*	F5
DL001	Q6
DL003*	R7
DL004*	R7
DL023*	L6
DL030*	R9
DL030	R9
DL032*	R10
DL032	R10
DL032	R11
DL034	N9
DL036	N9
DL041*	J8
DL041	J8
DL043	K8
DL046	P6
DL050	M6
DL051	L6
IDL052	L6
DL057*	L7
DL060*	M6
DL061*	Q6
DL062*	P6
DL066*	P7
DL070*	M7
DL071	K9
DL072*	K9
DL092	L6
DL147*	Q7
DL148*	Q7
DL157*	L8
DP018	P1
DP019	Q2
DP022	N1
DP027	K1
DP028	K2
DP034*	K 2
DP035	K2
DP040	N0
DP041	N0

DP043	M0
DP044	N0
DP045	N1
DP050	M1
DP051*	M2
DP052	K1
DP053	L2
DP054	L1
DP060*	K1
DP061*	J0
DP066	K0
DP108	L 5
DP108*	M5
DP108	M4
DP109*	M4
DP109	M4
DP110	Q4
DP112	Q 4
DP113	R5
DP126*	K5
DP130	N4
DP131*	N5
DP132*	P5
DP133	N5
DP134	J8
DP140*	L4
DP140	L4
DP151*	N4
DP152*	N5
DP160*	K3
DP172*	H4
DP173*	H4
DP175*	H3
DP178*	H3
DP179*	J4
DP190*	A1
DR090*	G0
DR091	E2
DR104	E1
DV011*	G8
DV012*	G8
DV025*	G7
DV026*	G8
DV027*	G8
DV028*	G8
DV101*	J5
DV104 *	K5
DV108*	K6
DV221*	K7
DX001*	E8
DX120	G10
DX151*	F10
DX220*	E9
DX251*	E9
DX301*	D10
DX351*	E10

FI001	C7
FI002	C6
FI010	C6
FI015	C7
FI020	C6
FI030	E6
FI040	E6

IA001	A7
IA001	A4
IA001	A8
IA002	A2
IF001	L11
II050	E6
IIL062*	M6
IP050	M1
IP060	K0
IP130	N5
IP140	J2
IP140	J1
IR001*	C2
IR001	C2
IR002*	C0
IR002	C0
IR003	B0
IR004*	F3
IR004	F3
IV001	H6
IX001*	E8
IX001	E8
IX900	E9

JA002	A1
JA003	A2
JA004	B4
JA005	B4
JA006	B4
JA007	B4
JA008	A5
JA009	A5

JA010	A5
JA011	A5
JA012	A5
JA013	A 6
JA014	B7
JA015	B7
JA016	B8
JA017	A7
JA018*	A 8
JA019	B7
IJA020	B10
JA021	A10
JA022	B11
JA023	B9
JA051*	A10
JA052*	B10
JA053*	B9
JA054*	B9
JA055*	A4
JA056*	A4
JA100	K4
JF001	K10
JF003	L10
JF004*	J9
JF005*	L11
JF010*	K10
JF011*	K10
JH005*	C8
JH006*	C8
JH007	B8
JH009	C11
JH903*	C 10
JI001	C7
JI004*	D9
JI005*	E7
JI006*	E7
JI008*	C6
JI009*	E6
JI010*	D5
JI012*	C5
JI013*	D5
JI014*	F5
JI015*	D7
JI016	B8
JI020	B8
JI021	D5
JI022	F6
JI023	F6
JI024	F 4
JI901	C5
JI902*	D5
JI903*	D6
JI906*	D8
JI910*	D5
JI915*	E7
JI916*	E7
JI928*	D8
JI930*	D7
JI931*	D8
JL001	M8
JL005*	Q 5
JL006	M7
JL007	M6
JL008	L6
JL009 *	M7
JL010*	M8
JL011	M7
JL012	N6
JL016	K9
JL017	K9
JL018	H9
JL019	H9
JL020 *	K 7
JL021	K7
JL032	N10
JL033	Q8
JL034	N7
JL035	N8
JL036	Q11
JL037	P11
JL083	N 6
JL084	N6
JL932	M10
JL933	N10
JL934	M10
JL936	N10
JL937	P10
JL943*	K8
JL984	N6
JL985	P6
JP136	G0
JP170	K5
JP201*	L2
JP204*	P5
JP205	H1
JP208*	J5
JP209*	P0
JP211*	K2
JP300	K1
JP301	L2
JP302	P1
JP303	L4
JP304	L3
JP305	P5
JP306	M1

JP307	P4
JP309	J4
JP310	H3
JP311	J3
JP312	J3
JP313	J3
JP314	H1
JP315	H2
JP316	H1
JP317	J1
JP318	N2
JP319	M1
JP321	H3
JP322	G0
JP324	N5
JP326	L1
JP327	L1
JP328	R2
JP902*	K2
JP903*	L3
JP910	J2
JP911	J2
JP913	L5
JP914	P4
JP915	P4
JP916	P4
JP917*	P4
JR007*	C0
JR008*	B1
JR009*	B3
JR017*	C1
JR018*	C1
JR019*	D 2
JR020*	D1
JR021*	D1
JR022*	D1
JR023*	D0
JR024*	E3
JR026*	D1
JR027*	F2
JR028*	E2
JR029*	G0
JR030*	E2
JR031*	E3
JR032*	F2
JR033	F0
JR035*	G3
JR036*	G3
JR038*	F4
JR040*	G4
JR045*	C3
JR100	A0
JR102	C3
JR103	B3
JR104	C1
JR105	D1
JR106	D1
JR107	C3
JR108	C3
JR109	C3
JR110	D3
JR111	D3
JR112	D3
JR114	D3
JR116	D4
JR117	D4
JR118	D4
JR119	E4
JR120	E4
JR121	E4
JR122	E4
JR123	E4
JR125	E3
JR126	E3
JR127	E4
JR128	F3
JR129	E2
JR131	E1
JR132	E1
JR133	E1
JR134	F1
JR137	G0
JR138	G0
JR139	G1
JR140	G1
JR141	G1
JR142	F2
JR146	F3
JR147	F3
JR148	F4
JR149	F4
JR150	G4
JR151	G4
JR152	G3
JR153	G3
JR154	G3
JR155	G3
JR156	G4
JR160	G5
JR161	G5
JR162	G2
JR163	G2
JR165	G1
JR166	B6
JR167	B6

JR168	B7
JR171	C1
JR172	F4
JR173	E1
JR174	D0
JR175	F3
JR901*	B0
JR902*	D0
JR903*	B1
JR904*	B1
JR905*	B0
JR906*	F3
JR907	F2
JR908*	B0
JV001	H7
JV002	K6
JV003	G8
JV004	G5
JV005	F6
JV006*	G7
JV007*	H6
IJV009	K5
JV010*	L5
JV011	K6
JV012	K6
JV013*	H6
JV014*	H6
JV015	G5
JV016	J10
JV017*	J5
JV021	K6
JV022	K6
JV023	J5
JV031*	G4
JV032*	G4
JV033	G4
JV034	G4
JV901*	G6
JV902*	G6
JX002	E8
JX003*	E8
JX004*	E8
JX005	G8
JX006	F8
JX007	F8
JX008	F9
JX009	G8
JX010	E9
JX011	G9
JX012	G9
JX013	F8
JX014	G10
JX015	G9
JX016	G9
JX017	G9
JX019	G10
JX020	H11
JX021	E11
JX022	E10
JX023*	E9
JX025*	D11
JX050*	E10
JX051*	E11
JX055	E8
JX056	F8
JX920	G9
JX922	F8
JX923	F10

LIH004	C9
LII020	C5
LII051	E5
LII053	E7
LII070	E5
LII090	F7
LLI001	R7
LLI006	M5
LLI008	M8
LLI029	P10
LLI030	Q9
LLI031	R8
LLI032	R11
LLI033	N11
LLI034	M10
LLI037	P9
LLI043	K8
LLI045	H9
LLI046	P7
LLI047	P7
LLI084	N6
LLP019	Q2
LLP020	N3
LLP021	P2
LLP040	L0
LLP042	N0
LLP070	L3
LLP112	Q5
LLR002*	D0
LLR003	E0
LLR004	D3
LLR005	B2
LLR011*	D3

PI030	E7
PI035	D8
PI050	D7

QI053	D7
QI070	E5
QR001	D3

RA001*	A 1
RA002*	A0
RA003*	B3
RA004*	B4
RA005*	A 3
RA006*	A3
RA007*	A 3
RA008*	A 4
RA009*	B4
RA010*	B4
RA011*	B3
RA012 *	B4
RA013	A5
RA014	C3
RA016*	A0
RA017*	A1
RA018*	A1
RA019	E3
RA020*	A10
RA021*	A10
RA022*	A10
RA023*	A 10
RA024*	A9
RA025*	A9
RA026*	A9
RA027*	A 8
RA028*	A9
RA029*	A0
RA030	A7
RA031*	A2
RA032*	A 10
RA033*	A10
RA034*	B4
RA035*	A1
RA040*	A 9
RF002*	K10
RF003	K10
RF007*	K10
RF011	L10
RF012	K9
RF013	K9
RF015	K9
RF020	L10
RF023*	K9
RF024*	J9
RF025*	K9
RF026	J8
RF036*	K9
RH001*	C10
RH002*	C9
RH003*	C9
RH004*	C9
RH007	D9
RH008	H9
RH010*	C10
RH011*	C10
RI001*	C7
RI002*	E4
RI003*	C5
RI004*	B7
RI005*	C5
RI006*	C5
RI007*	D7
RI008*	C7
RI009*	C8
RI012*	C6
RI019*	C5
RI020*	C5
RI021*	D7
RI022*	C5
RI023*	C6
RI024*	C6
RI025*	C6
RI026*	C7
RI027*	D7
RI028*	D8
RI029*	E8
RI030*	E7
RI031*	E7
RI032*	F6
RI033*	D8
RI034*	C8
RI035*	D8
RI036	D8
RI037*	E7
RI038*	E8
RI039*	E8
RI040*	C5
RI041*	C6

RI042*	C5
RI043*	C6
RI044*	C6
RI045*	D8
RI049*	E6
RI050*	E6
RI051*	E6
RI052*	F6
RI053*	E 7
RI054*	C6
RI055*	E7
RI056*	E5
RI058*	D5
RI059*	E5
RI061*	E5
RI062*	D5
RI065*	D5
RI066*	D6
RI070*	F5
RI071*	F5
RI072*	E5
RI073*	E5
RI074*	E5
RI075*	F5
RI076*	D5
RI077*	E6
RI078*	F 4
RI079*	E4
RI082*	E5
RI083*	D5
RI084*	D4
RI090*	E8
RI091*	E7
RI092*	F7
RI093*	F7
RI094*	E8
RI095*	D8
RL001*	J5
RL002*	J5
RL003 *	J5
RL004	Q6
RL004	Q6
RL013	Q6
RL014	R7
RL015	R6
RL016*	R7
RL017*	R7
RL018*	R7
RL020*	J7
RL021*	K6
RL023	K6
RL024*	H8
RL025	K6
RL026*	P11
RL027*	P11
RL028	K6
RL029	P11
RL030	Q 10
RL030	Q10
RL037	P9
RL040	K8
RL043	K8
RL044*	L6
RL045*	L11
RL046*	N7
RL047	Q 6
RL048*	P7
RL050*	L6
RL051*	K7
RL052	M 6
RL053*	M6
RL054*	M6
RL055*	L7
RL056*	L7
RL057*	M 7
RL058*	L7
RL059*	Q6
RL063*	M 7
RL064*	P6
RL065*	P6
RL066*	Q7
RL067*	Q9
RL068*	Q 9
RL069*	Q9
RL070*	M 7
RL071*	L9
RL072*	K 9
RL073*	N6
RL080*	J6
RL081	K5
RL082	L6
RL084	P6
RL092*	L7
RL124*	N9
RL125*	N9
RL126*	M9
RL127*	M 9
RL129	P10
RL134*	N9
RL135*	N9
RL136*	M 9
RL137*	M9
RL146*	Q7
RL147*	Q7
RL149*	Q7

RL155*	L7
RL160*	L7
RL171*	L9
RL211*	L8
RL214*	K7
RP020	P0
RP022	N1
RP025	K2
RP025	K2
RP026*	K2
RP027*	K1
RP028	L1
RP029*	L1
RP030	L1
RP031	L1
RP032	M1
RP035	K2
RP040	L0
RP041*	M0
RP042*	M0
RP050	M2
RP051*	L1
RP052*	L0
RP053	L1
RP054	K1
RP054	K1
RP055	K3
RP056*	K0
RP059*	J1
RP060*	K1
RP061*	K1
RP062	J0
RP063*	K0
RP064*	J0
RP065*	K0
RP066	L1
RP067*	M0
RP068*	L1
RP069*	L0
RP070*	L2
RP100	R3
RP102*	M3
RP112	R4
RP112	R5
RP120*	M5
RP121*	L5
RP122*	M5
RP123*	K4
RP124*	K4
RP125*	L4
RP126*	K5
RP127*	K5
RP128	K5
RP129*	K5
RP130	L5
RP138*	J3
RP139*	K4
RP140*	H2
RP141*	H2
RP142*	H2
RP143*	J2
RP144*	H0
RP145*	H0
RP146*	H1
RP147*	H0
RP148*	H1
RP149*	J1
RP150*	P4
RP151*	P4
RP152*	N5
RP156	N4
RP157*	N4
RP158*	P4
RP159*	N4
RP160*	J4
RP161*	L4
RP162*	K3
RP163*	L3
RP164*	H1
RP165*	H1
RP166*	H0
RP167*	H0
RP168*	G0
RP170*	K6
RP171*	H4
RP172*	J4
RP173	K6
RP175*	H4
RP176*	H4
RP177*	H3
RP179*	J4
RP190*	A1
RP191*	A1
RP192*	A2
RP193*	A1
RP194*	B2
RR010*	D1
RR011*	C2
RR012*	C2
RR013*	F0
RR014*	G0
RR015	D1
RR016	D2
RR017	D1
RR018	F2

RR019	F 2
RR021	D4
RR025*	E0
RR026 *	E0
RR027*	E1
RR028*	D2
RR029*	F0
RR030 *	F0
RR031*	F0
RR032	E3
RR033	E3
RR034	E3
RR035	E3
RR036*	F0
RR037*	E0
RR038*	E0
RR039*	E0
RR040*	E0
RR041*	E1
RR042 *	F1
RR043 *	F0
RR044 *	C2
RR045 *	C2
RR048*	F2
RR049*	F2
RR050*	B2
RR051*	B1
RR052*	B2
RR053*	C2
RR055*	C2
RR056*	C2
RR057*	E3
RR060*	B2
RR061*	B1
RR062*	B3
RR063*	B2
RR065*	C2
RR066*	C2
RR067*	B2
RR070*	B2
RR071*	B3
RR072	B2
RR075*	B1
RR076*	B1
RR084*	G1
RR085	G2
RR086	C4
RR087	E2
RR088	C4
RR089	E2
RR091*	G0
RR093*	F1
RR097*	F3
RR098*	G1
RR099*	G1
RR100*	C2
RR103*	G4
RR104*	E1
RR105*	G1
RR106*	G0
RR107*	G1
RR171*	B2
RR910*	F4
RR924*	E2
RV001*	H8
RV002	H7
RV003*	J7
RV011*	H9
RV012*	H8
RV021*	G5
RV022*	J5
RV038*	G5
RV041*	G7
RV043*	G7
RV051*	G5
RV052*	G6
RV053*	H6
RV061*	H6
RV062*	H6
RV063*	H5
RV064	H5
RV066*	H5
RV071*	J6
RV072*	H6
RV073*	H5
RV074	H5
RV076*	H5
RV081*	J6
RV082 *	H6
RV083*	H5
RV084	H5
RV086*	H5
RV091*	H6
RV092*	H6
RV101*	L6
RV107*	J5
RV108*	K6
RV109*	K5
RV110*	L6
RV112*	K6
RV201*	H7
RV202*	F6
RV203*	F7
RV206*	H7
RV213*	J6

RV216*	J 6
RV221*	K7
RV222*	K6
RV223*	K7
RV231	K7
RV232	J7
RV233	J7
RV241*	J5
RV242*	J5
RX107*	H11
RX111*	H11
RX115*	H11
RX116*	H10
RX120*	H10
RX121*	H10
RX122	G10
RX130*	J11
RX131*	F8
RX132*	F8
RX133*	F8
RX134*	F8
RX140*	J11
RX150*	F10
RX151*	F10
RX215*	E11
RX220*	F11
RX221*	E11
RX250*	E10
RX251*	E10
RX280*	B8
RX281*	D10
RX282*	D10
RX301*	E11
RX303*	E11
RX350*	E10
RX351*	E10
RX900	F10
RX910	G10
RX911*	H10
RX912*	H10
RX920*	D9
RX921*	D10
RX922*	D10
RX950*	F9
RX951*	G8
RX955*	E9
RX956*	E9
RX960*	F9
RX961*	G8
RX965*	E9
RX966*	E9
RX991	H9
RX992	D9

TI010*	C5
TI020*	C6
TI030*	D8
TI031*	D8
TI032*	D8
TI033*	F6
TI034*	E8
TI040*	D5
TI045*	D5
TI050*	C6
TI070*	E4
TI090*	E7
TI091*	E7
TI092*	D8
TI093*	D8
TL001*	K5
TL004*	Q6
TL005*	R6
TL028	Q11
TL030	R8
TL030	R9
TL062*	K7
TL063*	M6
TP025*	K2
TP026*	K2
TP027 *	J0
TP060	N0
TP129*	L5
TP145*	H2
TP146	J2
TP150*	N5
TP152*	N4
TP161*	K3
TP162*	K3
TP166*	H0
TP167*	G0
TP170*	K6
TP175*	H4
TP190*	A1
TR002*	F0
TR048*	F2
TR091*	G0
TR095*	F2
TR102*	G4
TR105*	G1
TR106*	G2
TV002	H7

TV063*	H5
TV073*	H5
TV083*	H5
TV108	K6
TX910	H10
TX920	D10
TX950	F9
TX955*	E9
TX960*	F9
TX965*	E9

H5
H5
H5
K6
H10
D10
F9
E9
F9
E9

MAINS FILTER - MIS 19000

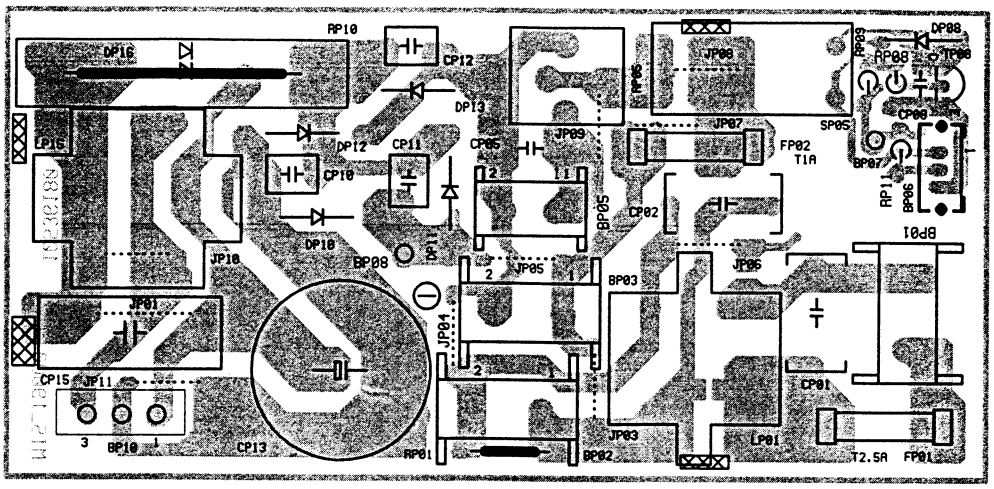

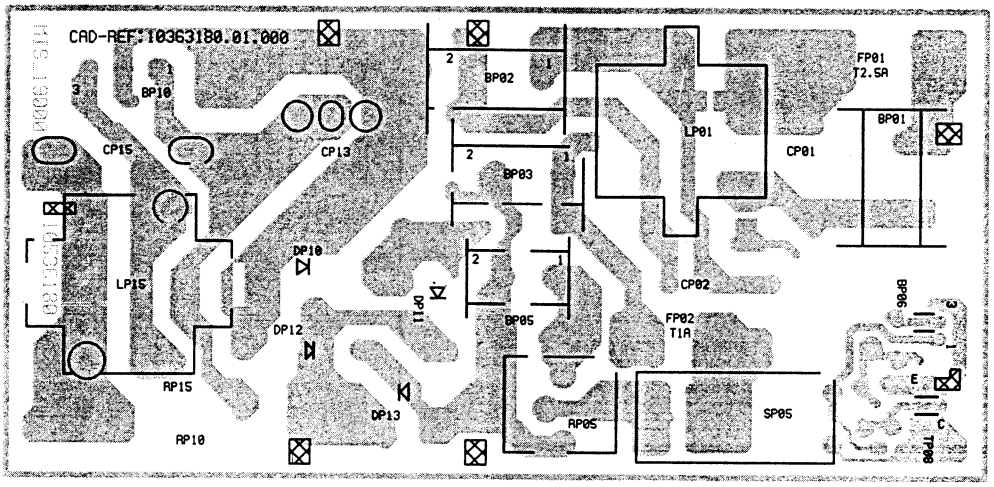

INTEGRATED CIRCUITS AND TRANSISTORS OUTLINE - CIRCUITS INTEGRES ET TRANSISTORS
INTEGRIERTE SCHALTUNGEN UND TRANSISTOREN - CIRCUITI INTEGRATI TRANSISTOR
CIRCUITOS INTEGRADOS Y TRANSISTORES

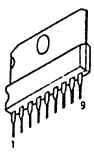

TDA 8139

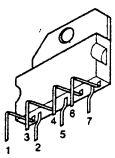

TDA 8177

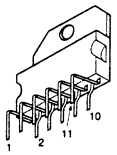

TDA7269

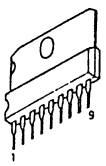

TEA 5101B

4N25TV

TDA4605
ST24C04-B1

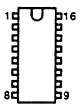

STV2145

TEA6415C

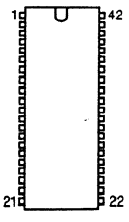

TDA9811

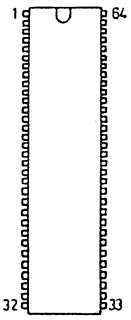

MPS3400
MPS3410

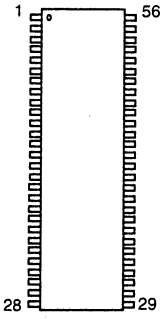

STV2162

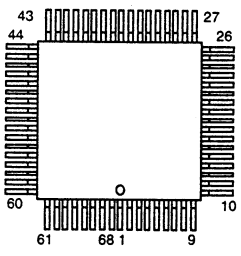

ST90R92

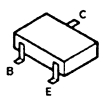

BCR141- BC846B
BC 847B-BC856B
BC857B-BF 799
BC 848 A/B/C

BC368
BF 422
BF423

BC 337
BC 548B
BC 558B

2SA1837
2SC4793
BD 241

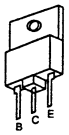

BUL810TH
BUV48CFITH16
ON4977

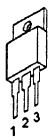

7805
7812

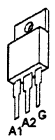

BT806 -600C

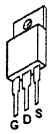

STP6 NA60F1

COMPLETE PCB DIAGRAM - SCHEMA PLATINE PRINCIPALE EQUIPEE - SCHALTUNG LEITERPLA

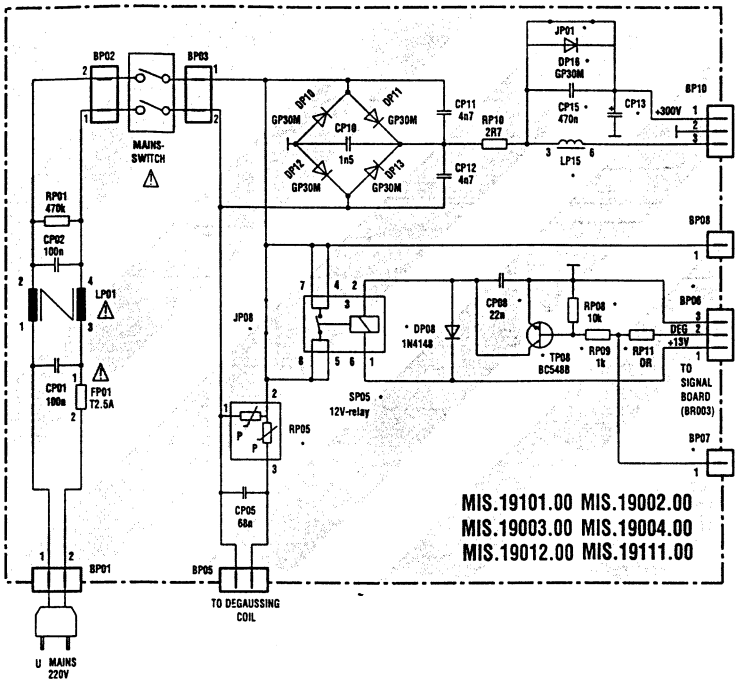

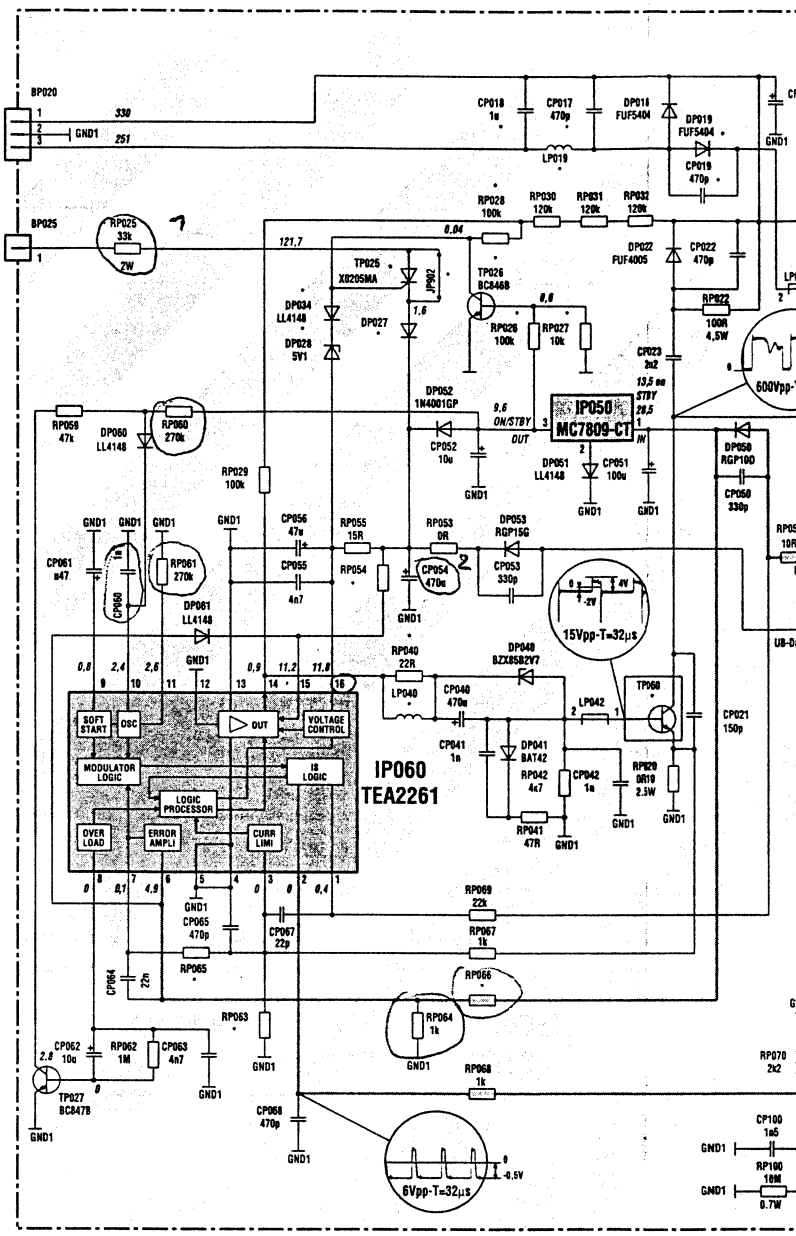

DESIGNATON POWER
PP.19100.00, PP.19101.00, PP.19110.00, PP.19111.00

*	PP 19111 00 10536990	PP 19101 00 10393830	PP 19110 00 10536980	PP 19100 00 10353750
	100Hz/Dolby	100Hz/Dolby	100Hz/Stereo	100Hz/Stereo
CP017/018/019	-	X	-	X
CP020	150u	150u	150u	150u
CP112	3n3	3n3	3n3	3n3
CP126	X	X	-	-
CP146	X	X	X	X
DP019	-	X	-	X
DP027	1N4148	1N4148	1N4148	1N4148
DP028/034	X	X	X	X
DP108/109	BYW029-150	BYW029-150	RGP30D	RGP30D
DP110	MUR1100E	RGP50M	RGP50M	RGP50M
DP113	RGP10M	MUR1100E	MUR110E	MUR1100E
DP126	X	X	-	-
DP140	BYV63-50	BYV63-150	MR822	MR822
JP902	-	-	-	-
JP910/911	-	-	-	-
JP913	-	-	X	X
JP914	139V	139V	139V	139V
JP915	136V	136V	136V	136V
JP916	130V	130V	127V	130V
JP917	142V	142V	142V	142V
LP019	-	105u	-	105u
LP020	10397920	10397920	10397920	10459670
LP021	-	X	-	X
LP040	2u2	2u2	2u2	2u2
RP026/028	X	X	X	X
RP027	X	X	X	X
RP040	1/2W	1/2W	1/2W	1/2W
RP054	6R8	6R8	6R8	6R8
RP063	-	47k	-	47k
RP065	11k	12k1	11k	12k1
RP066	4k22	3k57	4k22	3k57
RP126/128	X	X	-	-
RP127/129	X	X	-	-
RP130	X	X	-	-
RP138/139	X	X	X	X
RP146	X	X	X	X
RP157	130k	130k	130k	130k
RP177	12k	12k	12k	12k
TP025/026	X	X	X	X
TP060	BUL810TH	BUL810TH	BUL810TH	BUL810TH
TP129	X	X	-	X
TP146	X	X	X	X
TP162	-		X	X

X Inserted
– Not inserted

*	different comp.	BP06	BP07	CP08	CP13	CP15	DP08	DP16	JP01	JP08	LP15	RP05	RP08	RP09	SP05	TP08
MIS.19101	100Hz/+relay	X	X	X	150u	X	X	X	–	–	1.5mH	18R	X	X	X	X
MIS.19002	50Hz	–	–	–	100u	X	–	X	–	X	3mH	25R	–	–	–	–
MIS.19003	50Hz/+relay	X	X	X	100u	X	X	X	–	–	3mH	18R	X	X	X	X
MIS.19004	50Hz/45W Pict.Pow.	–	–	–	–	X	–	X	–	X	3mH	25R	–	–	–	–
MIS.19012	50Hz	–	–	–	100u	–	–	–	X	X	–	25R	–	–	–	–
MIS.19111	100Hz/+relay	X	X	X	150u	–	X	–	X	–	–	18R	X	X	X	X

X Inserted
– Not inserted

Part of board connected to mains supply.
Partie du chassis reliée au secteur.
Primärseite des Netzteils.
Parte dello châssis collegata alla rete.
Parte del chassis conectada a la red.

⚠ Use isolating mains transformer
Utilise un transformateur isolateur du secteur
Einen Trenntrafo verwenden
Utilizar un transformador aislador de red
Utilizzare un transformatore per isolarvi dalla rete

UNG LEITERPLATTE KPL - SCHEMA PIASTRA COMPLETA - ESQUEMA PLATINA EQUIPADA

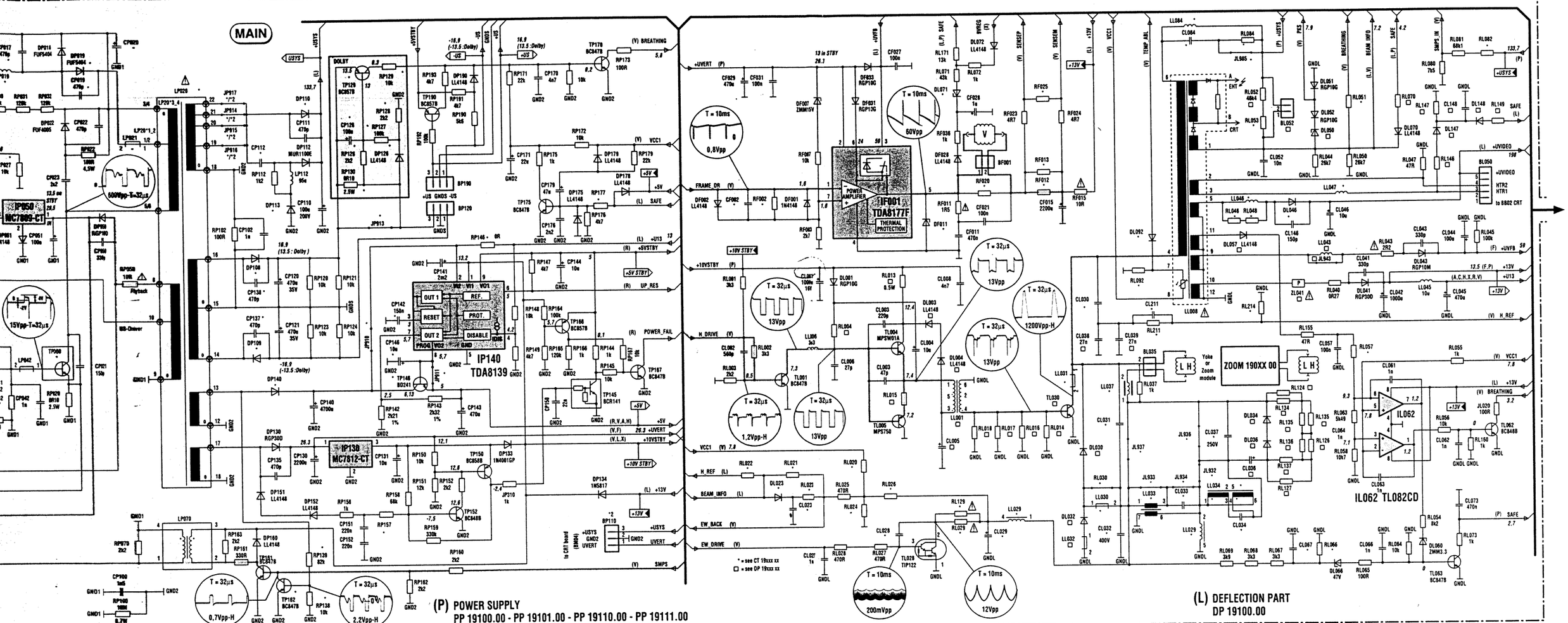

(P) POWER SUPPLY
PP 19100.00 - PP 19101.00 - PP 19110.00 - PP 19111.00

(L) DEFLECTION PART
DP 19100.00

LP15	RP05	RP08	RP09	SP05	TP08
1.5mH	18R	X	X	X	X
3mH	25R	–	–	–	–
3mH	18R	X	X	X	X
3mH	25R	–	–	–	–
–	25R	–	–	–	–
–	18R	X	X	X	X

Note :
Power Supply primary circuit measurements.
- Use only (GND1) connection point.

Attention :
Mesure dans le bloc alimentation
- Utiliser la masse du bloc alimentation (GND1).

Achtung :
Bei Messungen im Primärnetzteil
- Primärnetzteilmasse verwenden (GND1).

Attentionze :
misure nell'alimentatore primario
- usare massa alimentazione primario (GND1).

Cuidado :
Medida en el bloque de alimentacion
- Utilizar la masa del bloque de alimentacion (GND1).

Safety Part
When repairing, use original part only
Piece de securite
N'utilisez que les pieces d'origine
Sicherheitsbauteil
Bei Ersatz nur Originalteil verwenden
Componenti di sicurezza
durante la ripazione usare componenti originali
Pieza de seguridad
Utilice solo piezas originales

□	Deflection - Basic Partlists
	100Hz
	DP 19100 00
	10 34 99 80
BL052	–
CL005	470u/16V
CL036	2u2/250V
CL038	–
CL039	54n
CL148	220n
DL003/04	–
DL030	DTV32F-1500
DL032	BYT08-400
DL034/036	BYT01-200
DL050	BZX85C22
DL057	–
DL147/148	LL4148
JL943	–
LL001	10 46 87 60
LL030	–
LL032	10 25 84 40
LL043	22u
RF015	PTC-15R
RL004	1k
RL013	4R7
RL014	40R2
RL015	1R
RL016/17	40R2
RL018	40R2
RL070	15k
RL071	43k
RL124/127	7k5
RL134/137	7k5
RL146	100R
RL147	4k7
RL149	1k
TL030	ON4977
ZL041	MP160

*	Deflection - Picture Tube related Partlists					
	CT 19101 34	CT 19105 37	CT 1915237	CT 19111 34	CT 19112 34	CT 19151 34
	10 36 28 80	10 35 15 30	10 52 06 10	10 44 48 10	10 47 54 60	10 52 06 00
	100Hz	100Hz	100Hz-MCU	100Hz	100Hz	100Hz-MCU
	25-28"MP 4/3	29"SF 4/3	29"SF 4/3	28"SF 16/9	32"SF 16/9	32"SF 16/9
CF002	680p	680p	680p	2n2	2n2	2n2
CL023	–	–	–	–	–	–
CL028	56n	1n	1n	56n	56n	56n
CL029	470n/63V	3u3/63V	3u3/63V	470n/63V	470n/63V	470n/63V
CL030	1n9/2KV	1n9/2KV	1n92KV	2n7/2KV	2n7/2KV	2n7/2KV
CL031	11n6/2KV	11n6/2KV	11n6/2KV	11n6/2KV	11n6/2KV	11n6/2KV
CL032	33n/400 V	24n/400V	24n/400V	33n/400V	33n/400V	33n/400V
CL033	560n/250V	–	–	680n/250V	680n/250V	680n/250V
CL034	12n/400V	12n/400V	12n/400V	12n/400V	12n/400V	12n/400V
CL037	680n/250V	410n/400V	410n/400V	560n/250V	560n/250V	560n/250V
CL067	100n/100V	–	–	100n/100V	100n/100V	100n/100V
CL084	3n9/400V	3n9/400V	3n9/400V	3n9/400V	3n9/400V	3n9/400V
CL211	470p	470p	470p	470p	470p	470p
DF011	10 36 82 10	10 36 82 10	10 36 82 10	10 36 82 10	10 36 82 10	10 36 82 10
DL023	–	–	–	–	–	–
DL046	MUR160	MUR160	MUR110E	MUR160	MUR160	MUR110E
DL071	BZX55C33	BZX55C33	BZX55C33	BZX55C24	BZX55C24	BZX55C24
DL092	1N4148	1N4148	1N4148	1N4148	1N4148	1N4148
JL932	–	–	–	–	–	–
JL933	–	X	X	–	–	–
JL934	–	X	X	–	–	–
JL936	–	–	–	–	–	–
JL937	–	–	–	–	–	–
JL985	X	X	X	X	X	X
LL008	10 46 03 60	10 46 60 70	10 51 08 70	10 46 81 60	10 46 81 60	10 52 03 30
LL029	10 34 76 50	10 15 42 70	10 15 42 70	10 34 76 50	10 34 76 50	10 34 76 50
LL030	–	LFBEAD 90R	LFBEAD 90R	–	–	–
LL031	LFBEAD 90R	JUMPER	JUMPER	LFBEAD 90R	LFBEAD 90R	LFBEAD 90R
LL033	10 34 76 60	–	–	10 34 76 60	10 34 76 60	10 34 76 60
LL034	10 15 32 70	10 15 32 70	10 15 32 70	10 15 32 70	10 15 32 70	10 15 32 70
LL037	4u2	3u	3u7	4u	4u	4u2
LL046	47u	47u	22u	47u	47u	22u
LL047	13u5	13u5	13u5	13u5	13u5	13u5
LL084	29u5	29u5	29u5	29u5	29u5	29u5

*	Deflection - Picture Tube related Partlists					
	CT 19101 34	CT 19105 37	CT 19152 37	CT 19111 34	CT 19112 34	CT 19151 34
	10 36 28 80	10 35 15 30	10 52 06 10	10 44 48 10	10 47 54 60	10 52 06 00
	100Hz	100Hz	100Hz-MCU	100Hz	100Hz	100Hz-MCU
	25-28"MP 4/3	29"SF 4/3	29"SF 4/3	28"SF 16/9	32"SF 16/9	32"SF 16/9
RF002	10k	10k	10k	10k	10k	10k
RF012	1R	1R	1R	1R5	1R5	1R5
RF013	1R	1R	1R	1R82	1R82	1R82
RF020	180R	270R	270R	–	–	–
RF025	39R	43R	43R	150R	150R	150R
RL020	4k64	7k15	7k15	4k64	4k64	4k64
RL021	–	–	–	–	–	–
RL023	–	–	–	–	–	–
RL024	2k67	4k02	4k02	2k67	2k67	2k67
RL026	36k5	61k9	61k9	36k5	36k5	36k5
RL029	–	2R2	2R2	–	–	–
RL046/48	3k3	3k3	3k3	3k3	3k3	3k3
RL051	270k	270k	270k	270k	270k	270k
RL053	6k34	8k66	8k66	6k34	6k34	6k34
RL057	26k1	27k4	56k2	47k5	47k5	56k2
RL066	–	2k2	2k2	–	–	–
RL082	59k	61k9	61k9	59k	59k	59k
RL084	–	–	–	–	–	–
RL092	4k7	4k7	4k7	4k7	4k7	4k7
RL129	2R2	–	–	2R2	2R2	2R2
RL211	6k8	6k8	6k8	6k8	6k8	6k8
RL214	–	–	–	–	–	–
ZOOM MODULE	–	–	–	–	–	–

Note : the last two numbers of the CT xxxx part list name indicates the system voltage.
e.g. CT 19005 31 Usys 131V →

Nota: Los dos últimos números de la denominación CT xxxx, indica la tensión Usys
e.g. CT 19005 31 Usys 131V →

X Inserted
– Not inserted

COMPLETE PCB DIAGRAM - SCHEMA PLATINE PRINCIPALE EQUIPEE - SCHALTUNG LEITERPLATTE KPL - SCHEMA PIASTRA COMPLETA - ESQUEMA PLATINA EQUIPADA

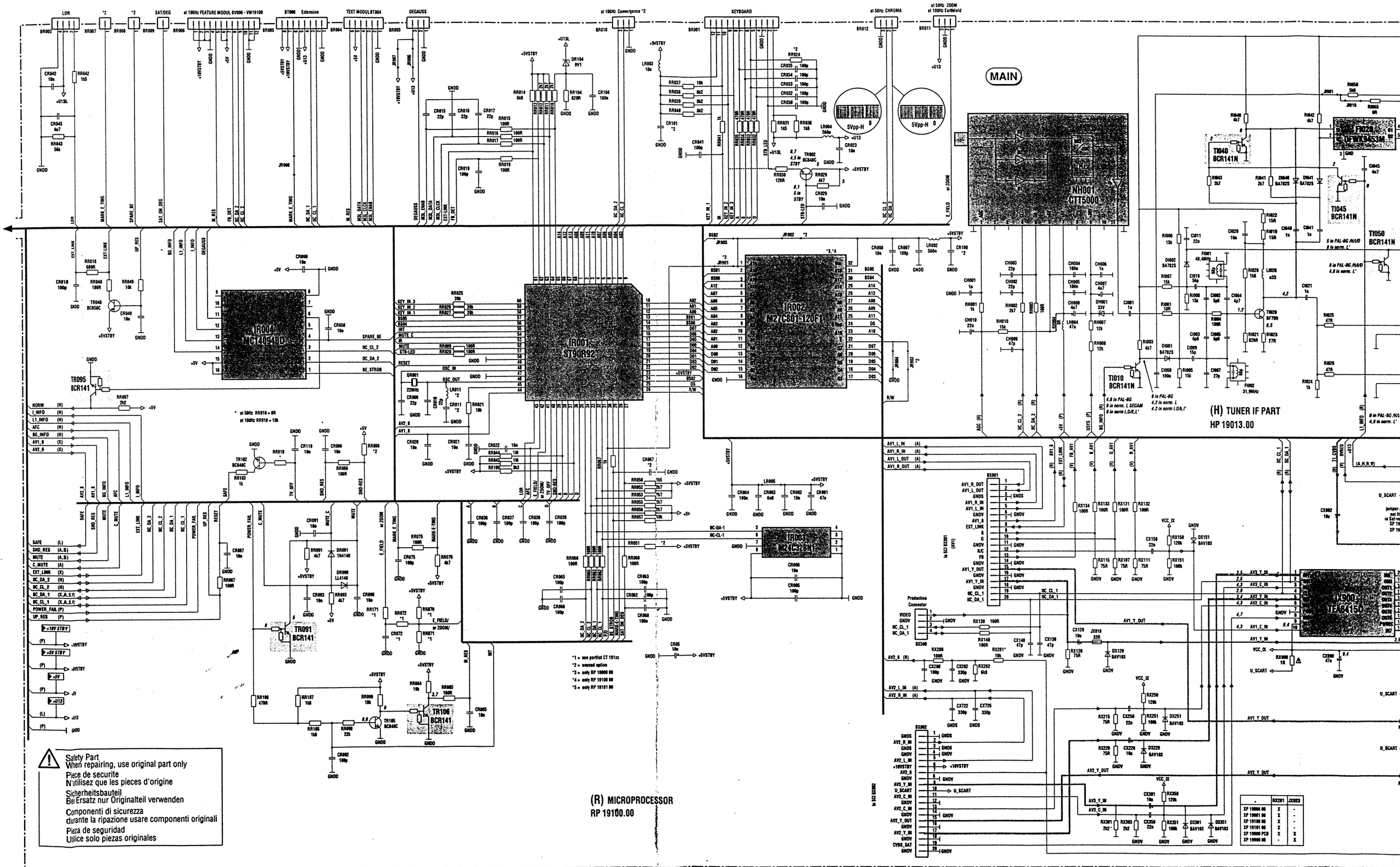

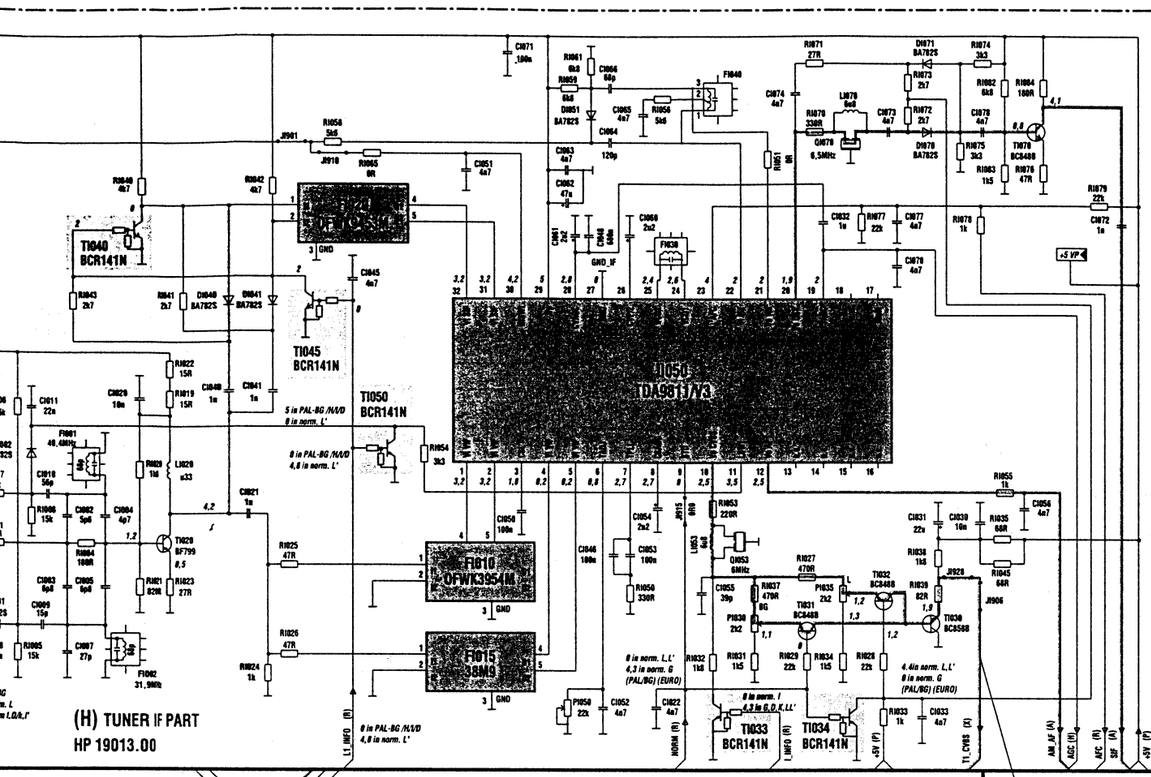

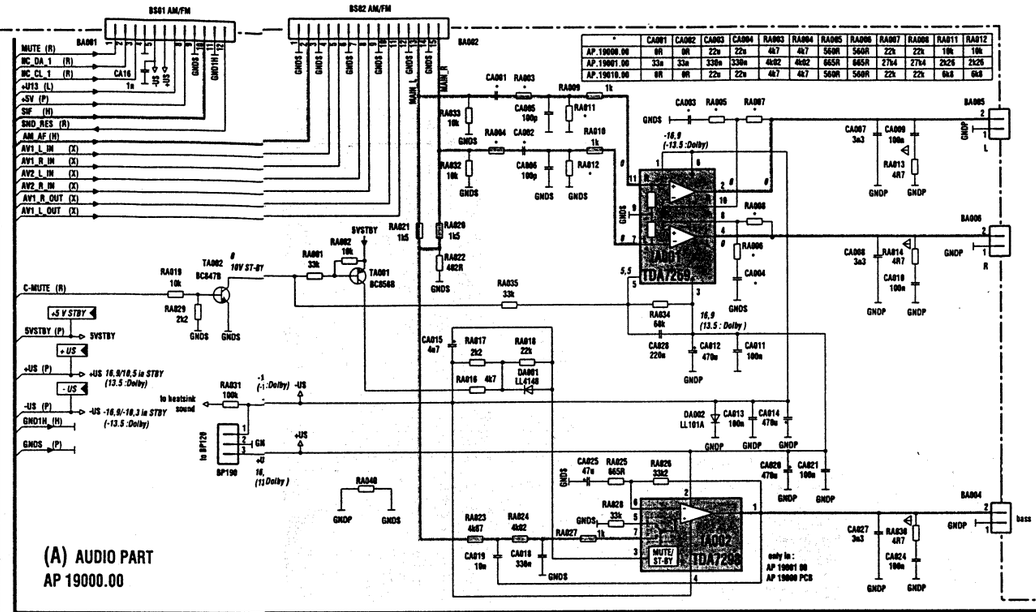

	CA001	CA002	CA003	CA004	RA003	RA004	RA005	RA006	RA007	RA008	RA011	RA012
AP.19000.00	0R	0R	22u	22u	4k7	4k7	560R	560R	22k	22k	10k	10k
AP.19001.00	33n	33n	330n	330n	4k02	4k02	665R	665R	27k4	27k4	2k26	2k26
AP.19010.00	0R	0R	22u	22u	4k7	4k7	560R	560R	22k	22k	6k8	6k8

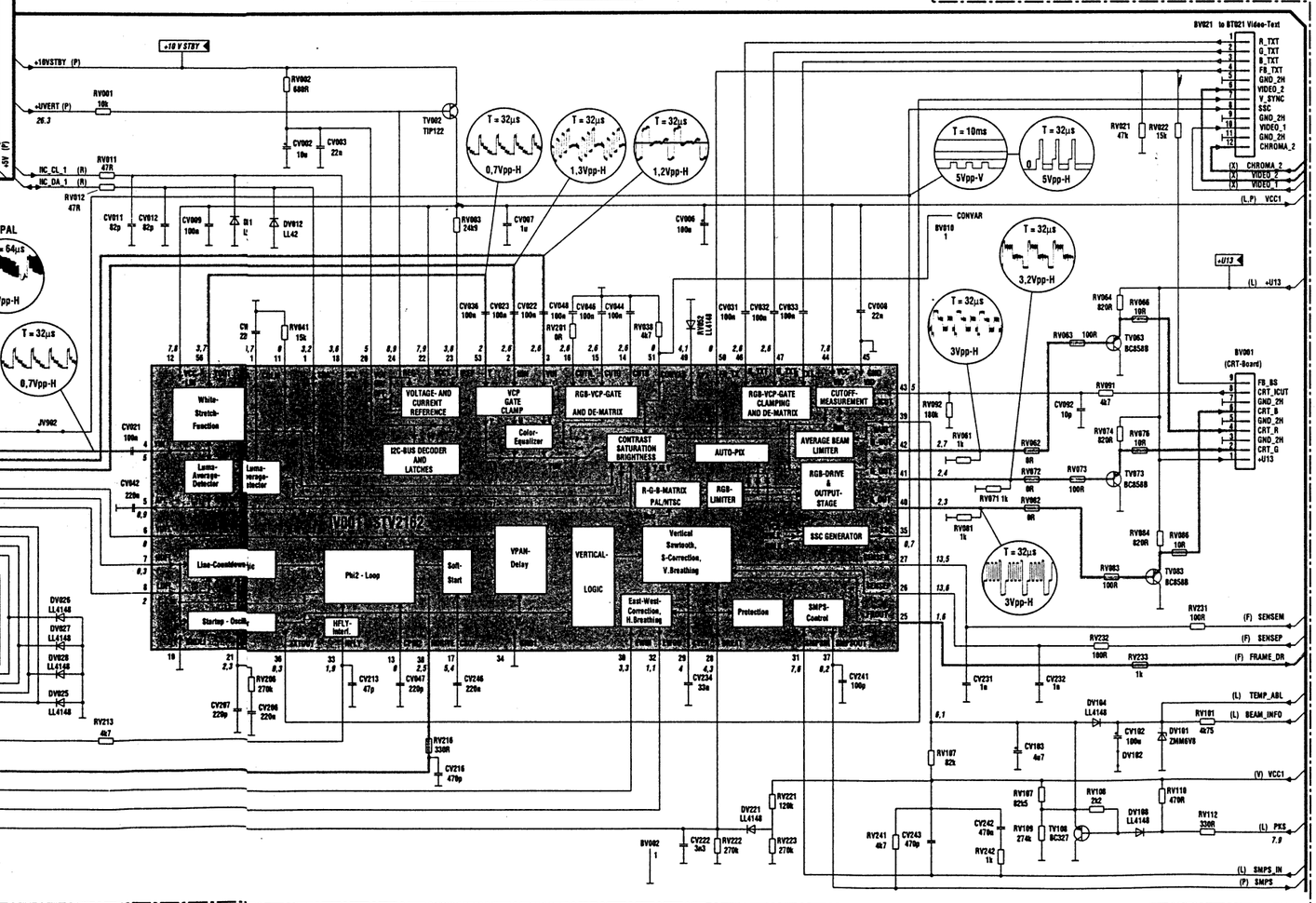

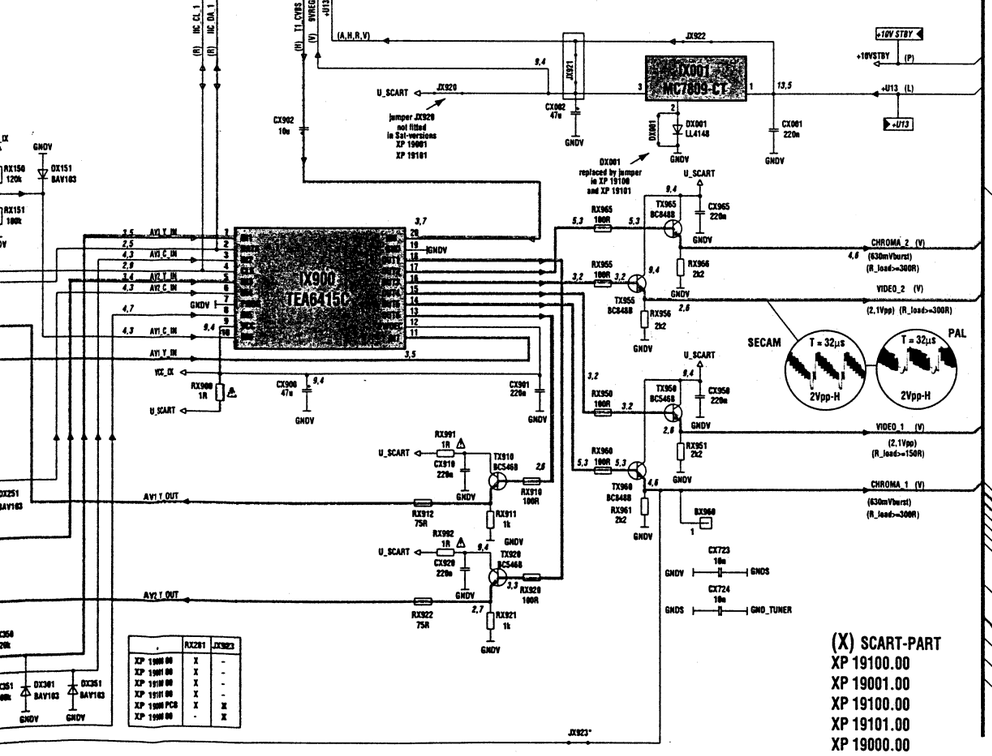

	RX281	JX9823
XP 19000 00	X	-
XP 19001 00	X	-
XP 19100 00	X	-
XP 19101 00	X	-
XP 19000 PCS	X	X
XP 19000 00	-	X

VM.19100.00

VM

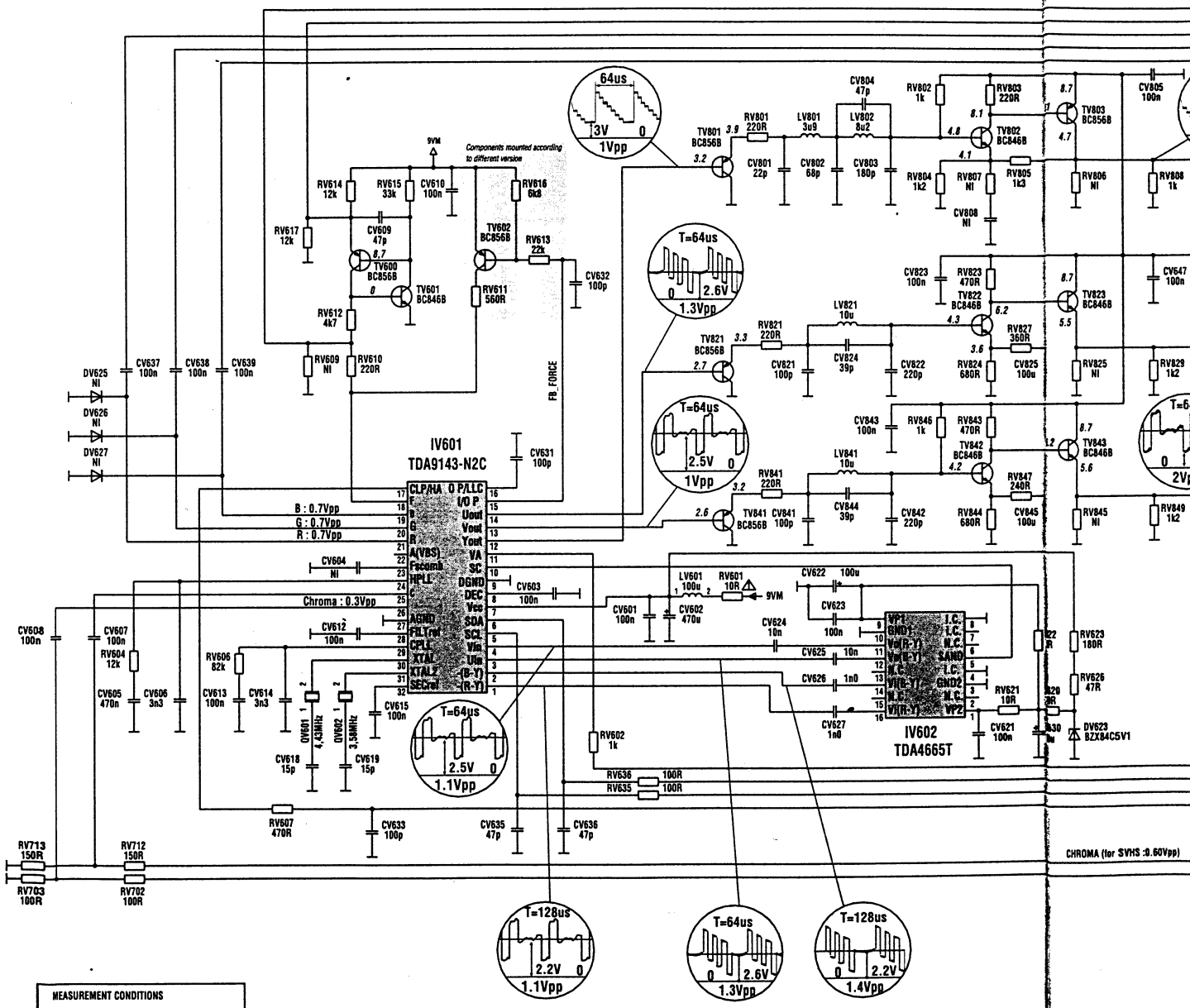

MEASUREMENT CONDITIONS

RECEIVER : On UHF level : 1mV test bar pattern
- SECAM Norm L standard, 100% white

DC voltages measured betwen the point and earth using a digital meter

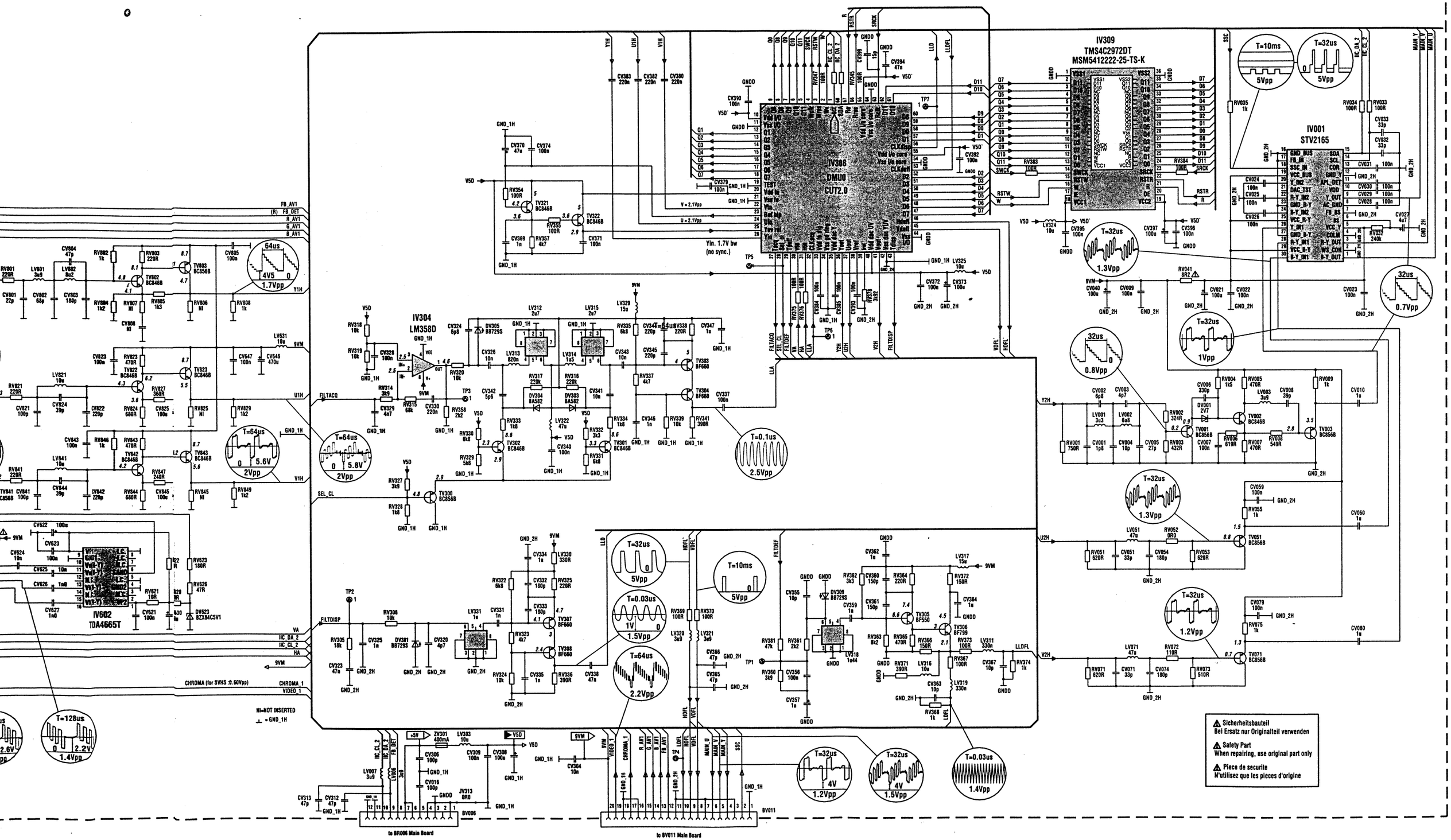
IV309
TMS4C2972DT
MSM5412222-25-TS-K
IV308
DMU0
CUT2.0
IV304
LM358D
IV602
TDA4665T
IV001
STV2165
T=10ms
5Vpp
T=32us
5Vpp
1.3Vpp
0.8Vpp
1Vpp
0.7Vpp
T=64us
2Vpp
5.6V
5.8V
T=128us
1.4Vpp
2.2V
T=0.1us
2.5Vpp
T=0.03us
1.5Vpp
T=64us
2.2Vpp
T=32us
1.2Vpp
T=32us
4V
1.5Vpp
T=0.03us
1.4Vpp
Yin. 1.7V bw
(no sync.)
V = 2.1Vpp
U = 2.1Vpp
64us
4V5
1.7Vpp
NI=NOT INSERTED
⊥ = GND_1H
CHROMA (for SVHS :0.60Vpp)
to BR006 Main Board
to BV011 Main Board
⚠ Sicherheitsbauteil
Bei Ersatz nur Originalteil verwenden
⚠ Safety Part
When repairing, use original part only
⚠ Piece de securite
N'utilisez que les pieces d'origine

VM19100

COMPONENT SIDE - COTE COMPOSANTS - BESTÜCKUNGSSEITE
LATO COMPONENTI - LADO COMPONENTES

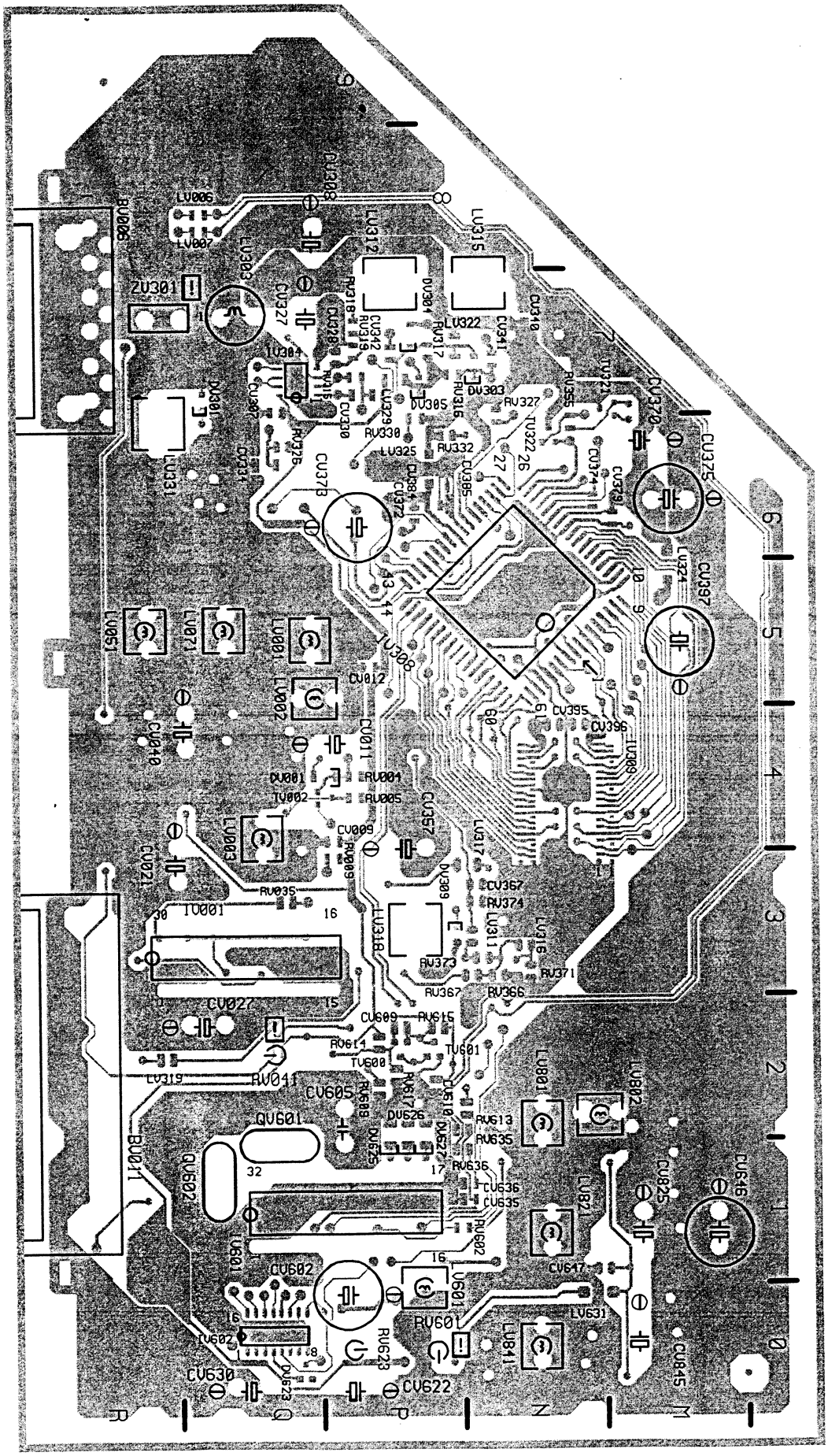

VM19100

SOLDER SIDE - CÔTE SOUDURES - LÖTSEITE - LATO SALDATURE - LADO SOLDADURAS

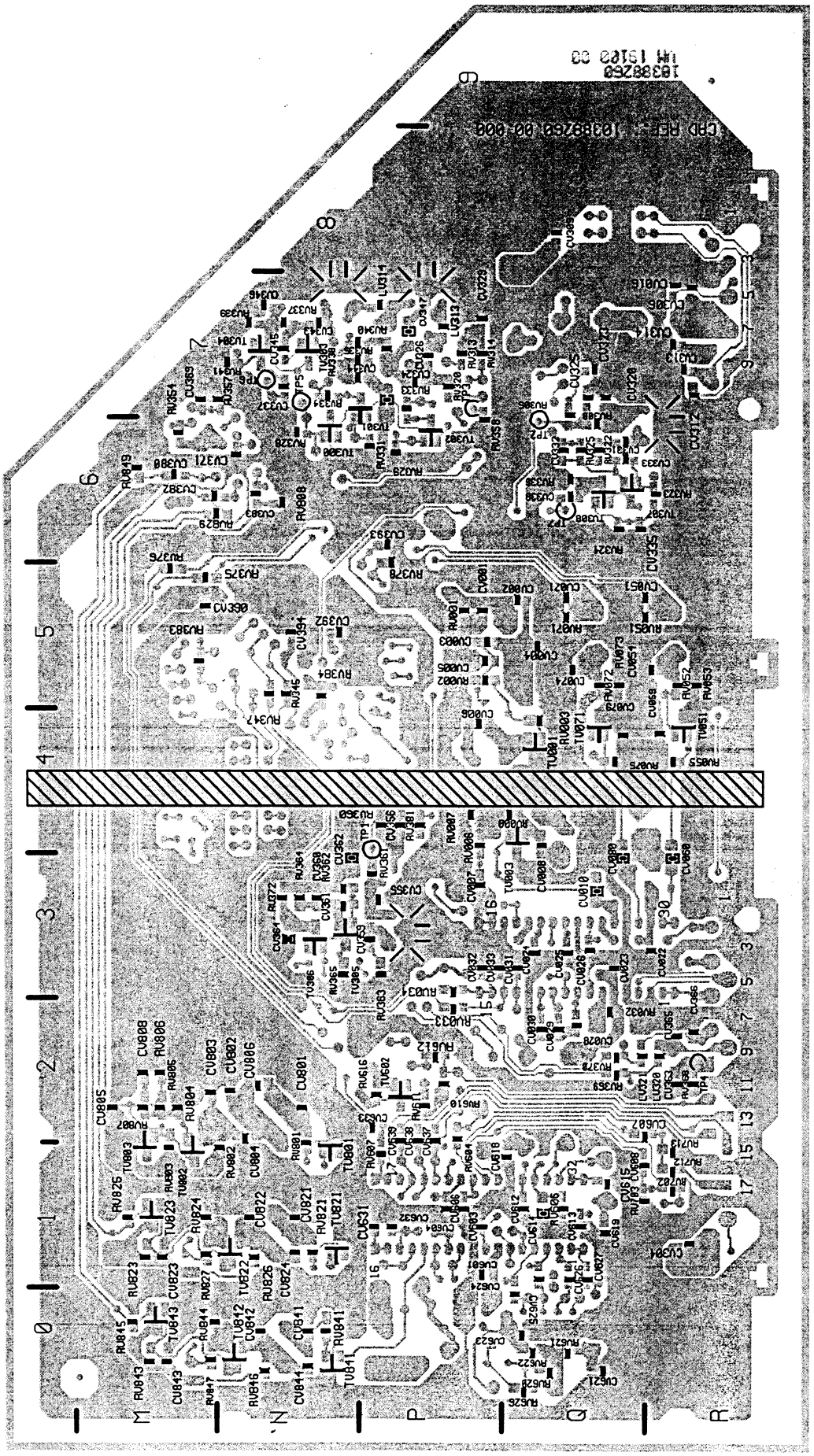

VIDEO AMPLIFIER BOARD - PLATINE AMPLIFICATEURS VIDEO - VIDEOVERSTÄRKERPLATTE - PIASTRA AMPLIFICATORE VIDEO - PLATINA AMPLIFICADOR VIDEO

CRT BS19100

COMPONENT SIDE - CÖTE COMPOSANTS - BESTÜCKUNGSSEITE - LATO COMPONENTI - LADO COMPONENTES

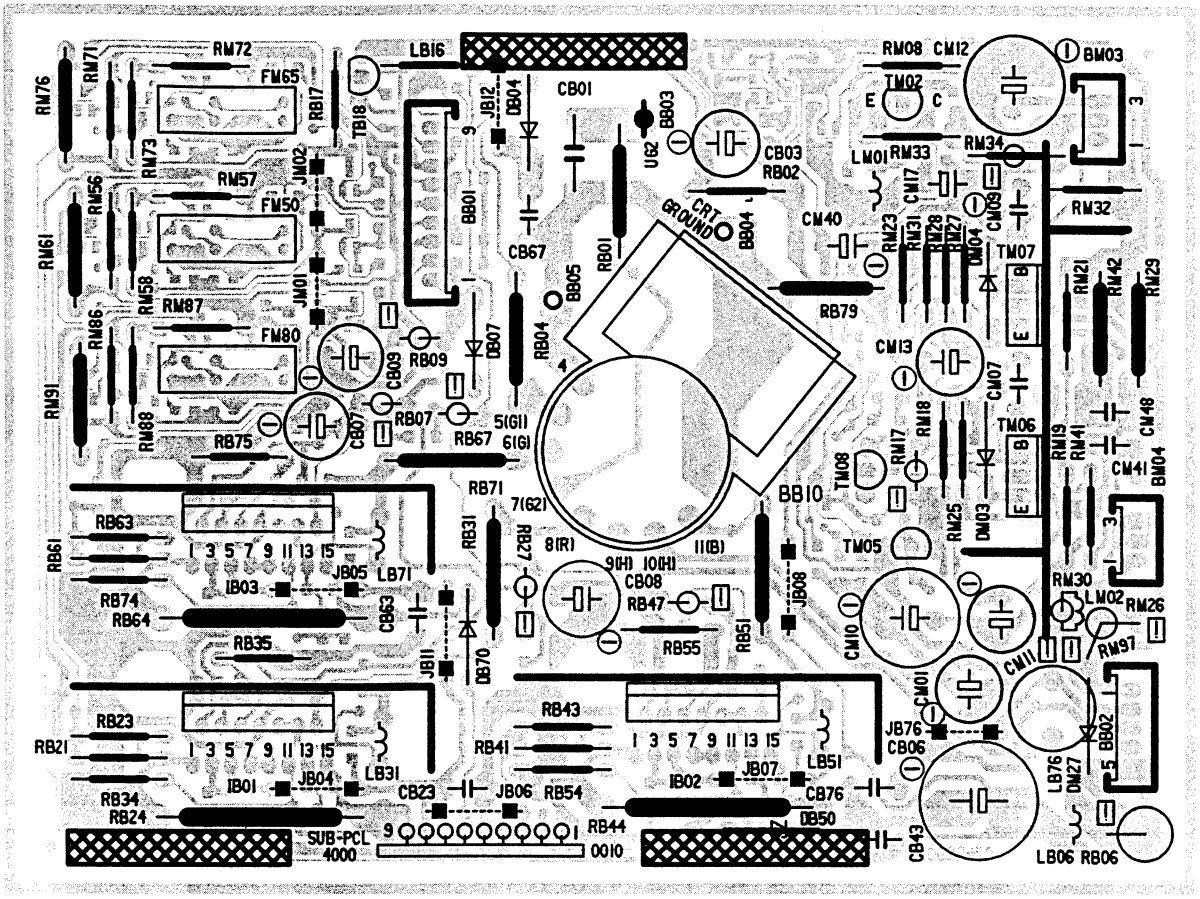

SOLDER SIDE - CÔTE SOUDURES - LÖTSEITE - LATO SALDATURE - LADO SOLDADURAS

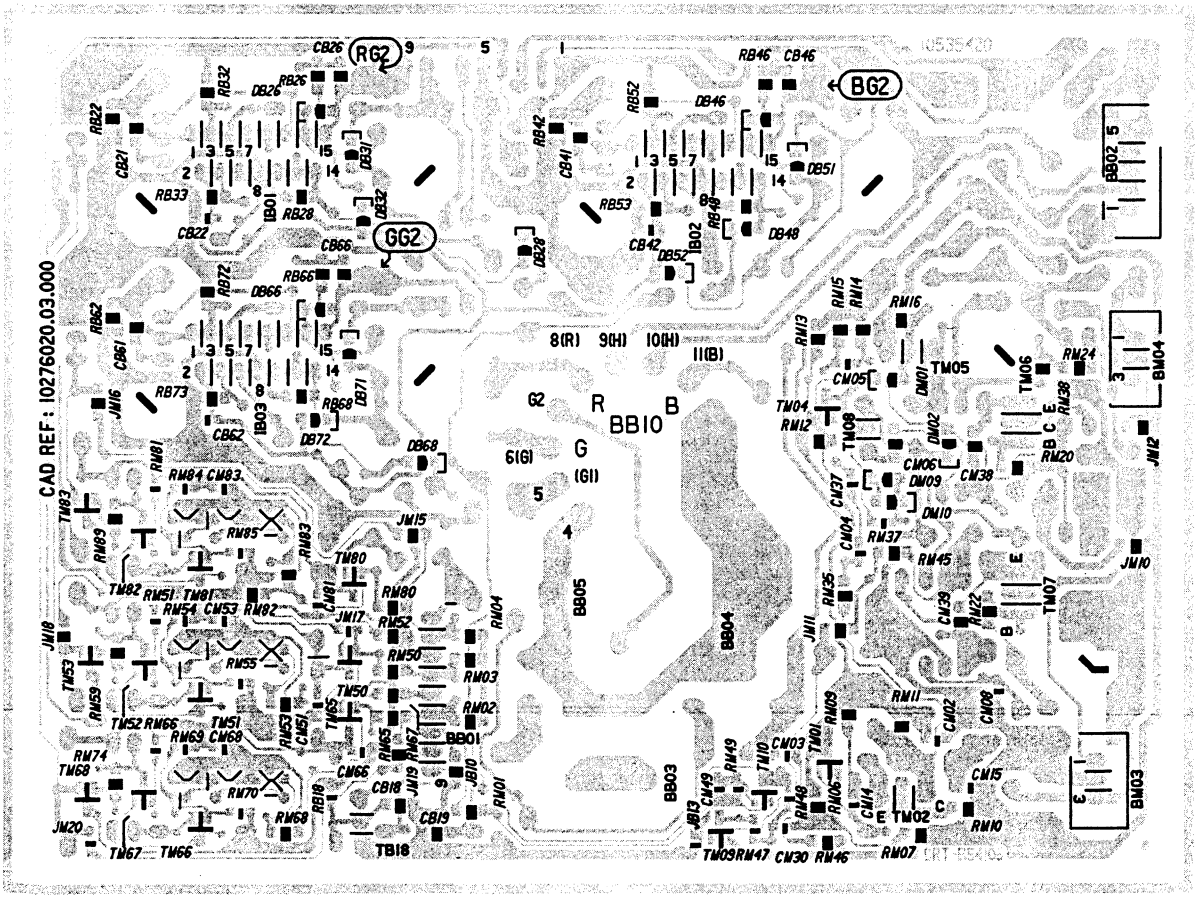

VIDEO AMPLIFIER BOARD - PLATINE AMPLIFICATEURS VIDEO - VIDEOVERSTÄRKERPLATTE - PIASTRA AMPLIFICATORE VIDEO - PLATINA AMPLIFICADOR VIDEO

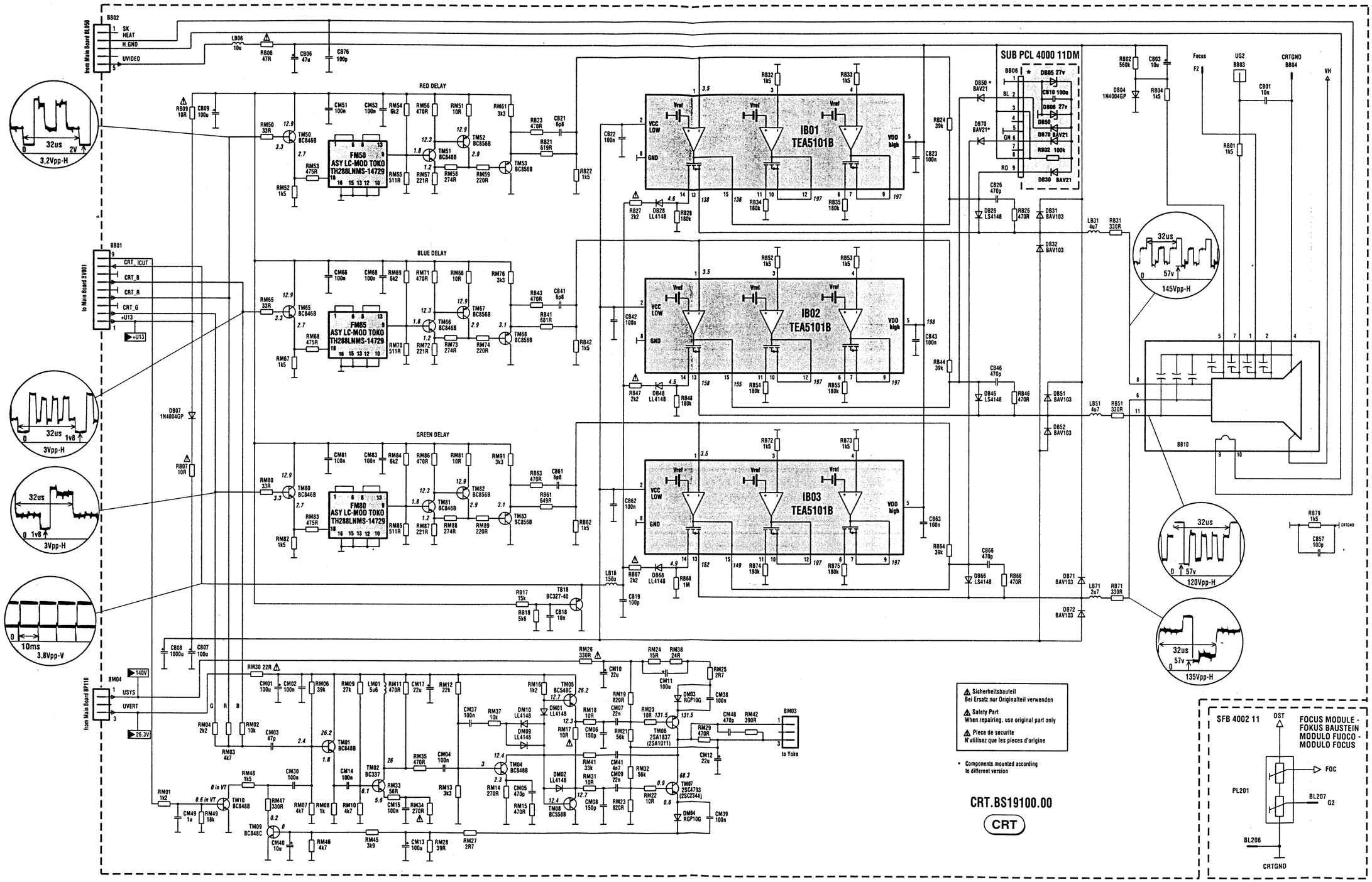

AUDIO SIGNAL MODULE - MODULE AUDIO - TON SIGNAL BAUSTEIN - MODULO AUDIO

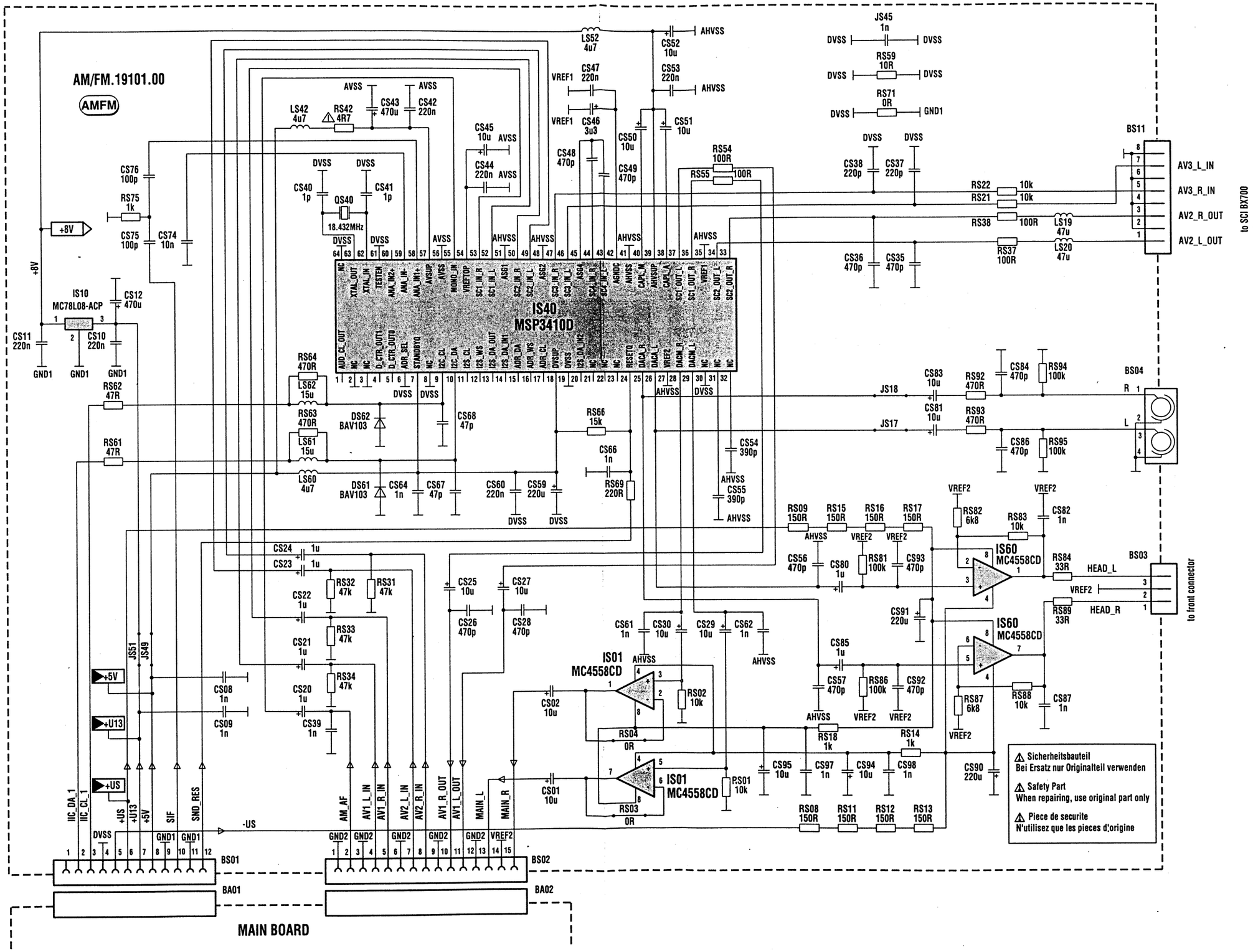

AM FM 19101

COMPONENT SIDE - COTE COMPOSANTS - BESTÜCKUNGSSEITE
LATO COMPONENTI - LADO COMPONENTES

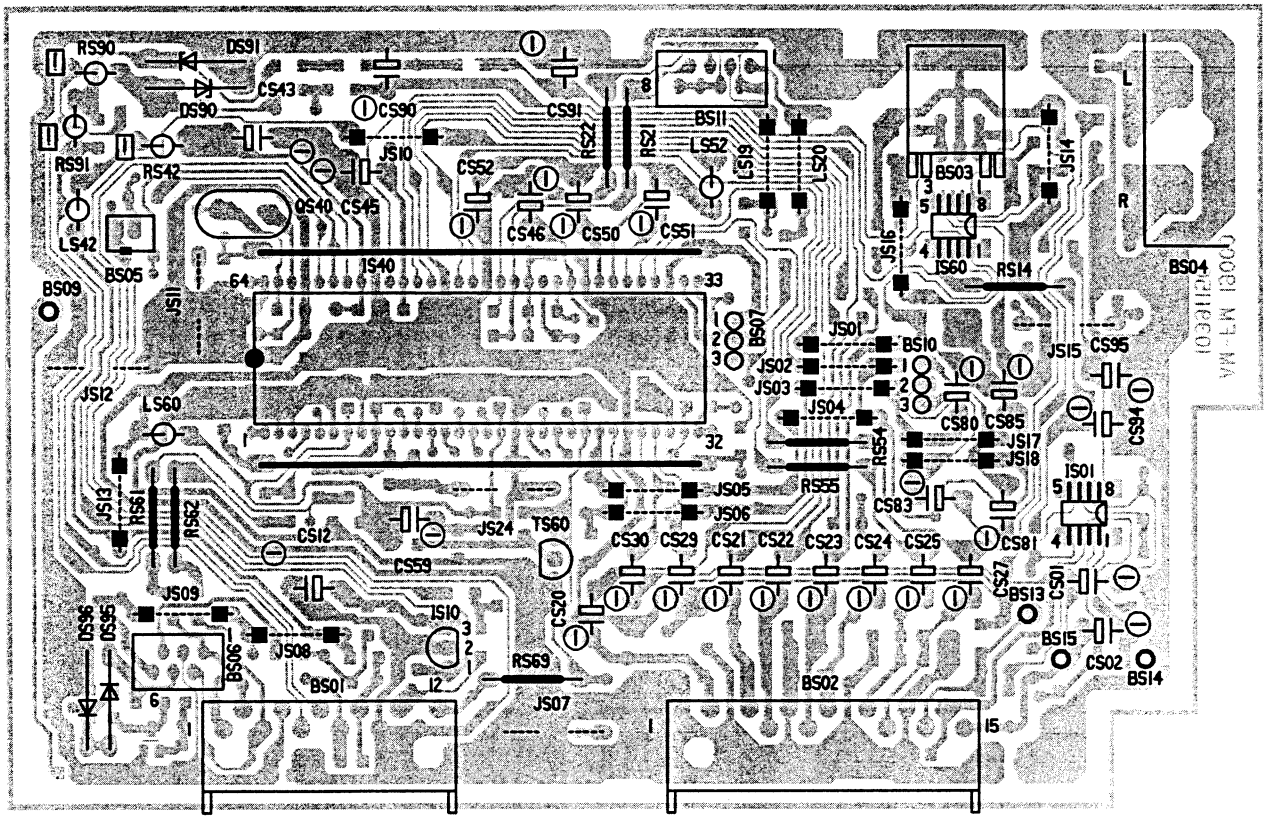

SOLDER SIDE - CÔTE SOUDURES - LÖTSEITE - LATO SALDATURE - LADO SOLDADURAS

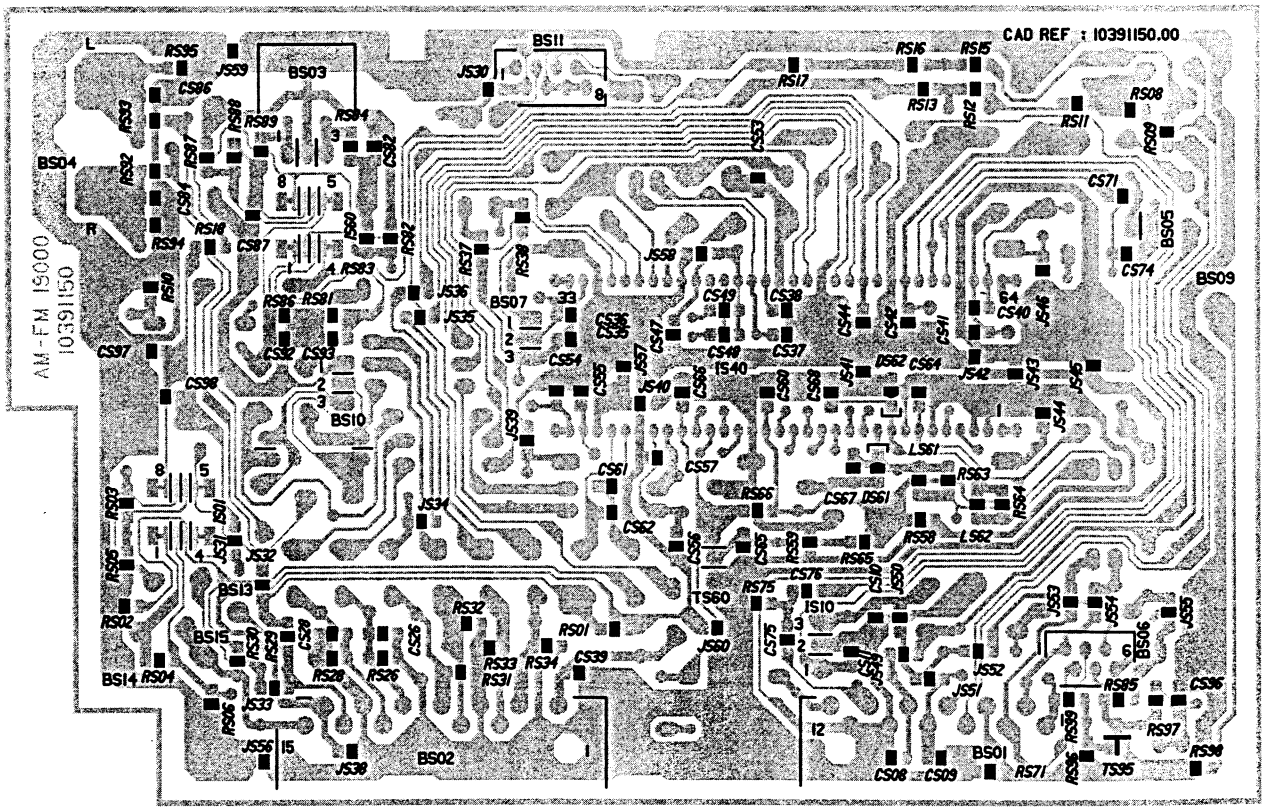

DVT 19000

COMPONENT SIDE - COTE COMPOSANTS - BESTÜCKUNGSSEITE
LATO COMPONENTI - LADO COMPONENTES

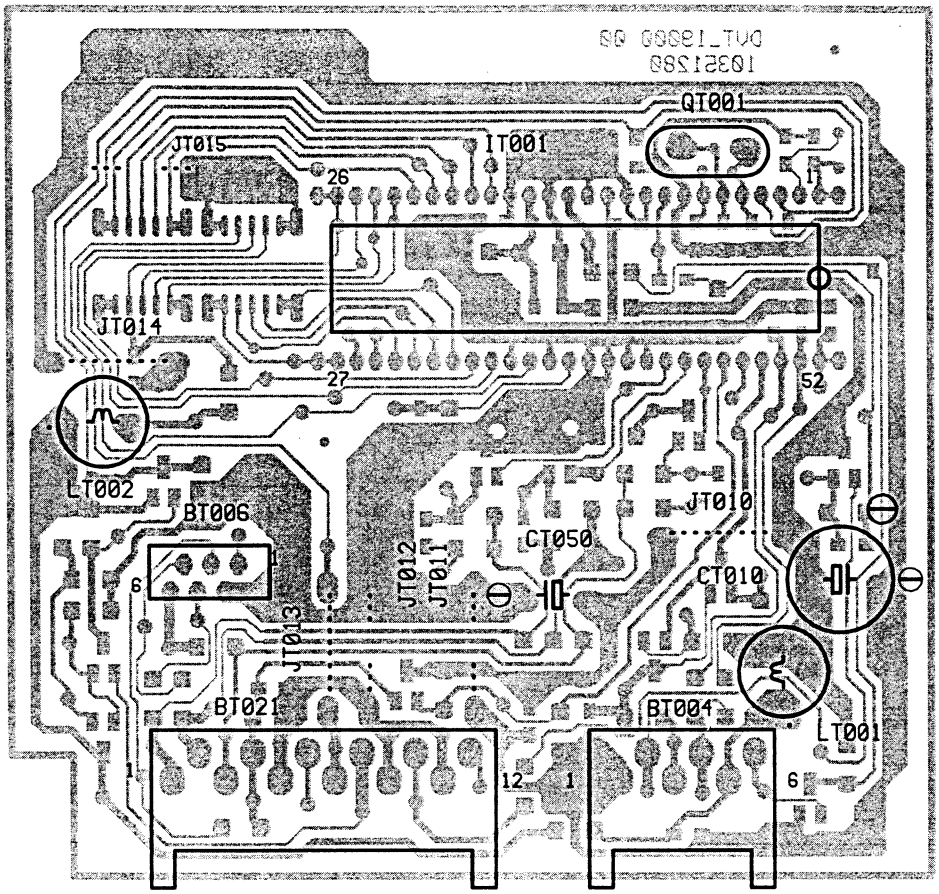

SOLDER SIDE - CÔTE SOUDURES - LÖTSEITE - LATO SALDATURE - LADO SOLDADURAS

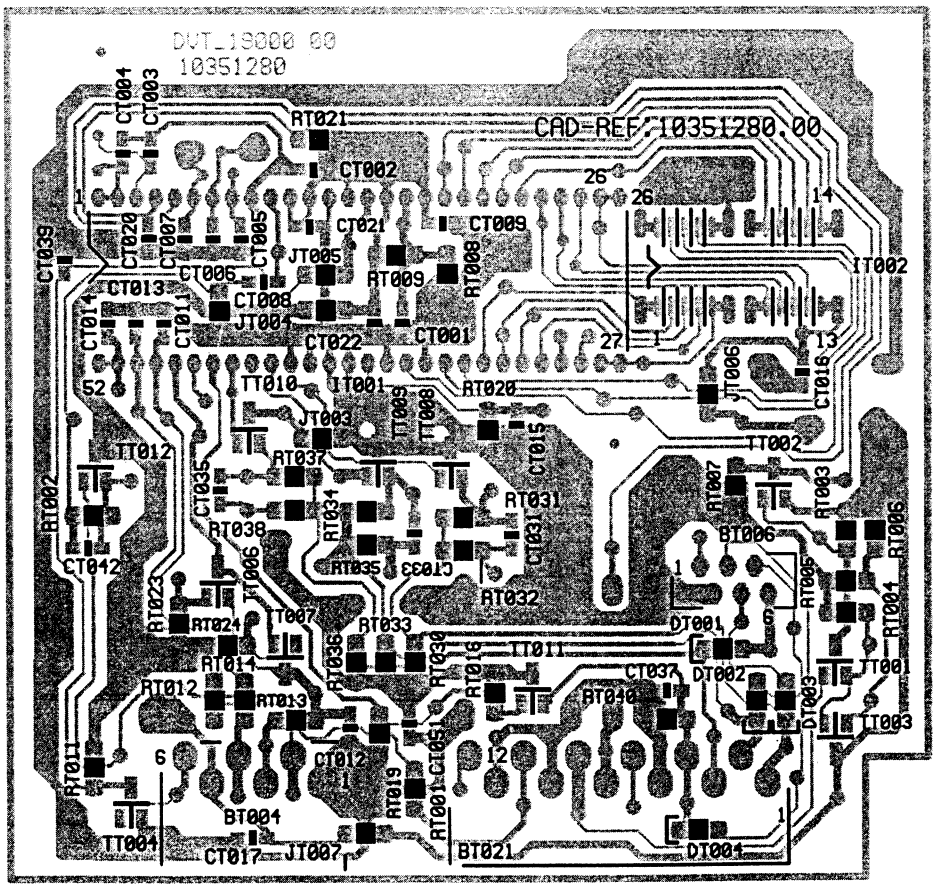

TELETEXT MODULE - MODULE TELETEXTE - VIDEOTEXT MODUL - MODULO TELEVIDEO - MÓDULO TELETEXTO

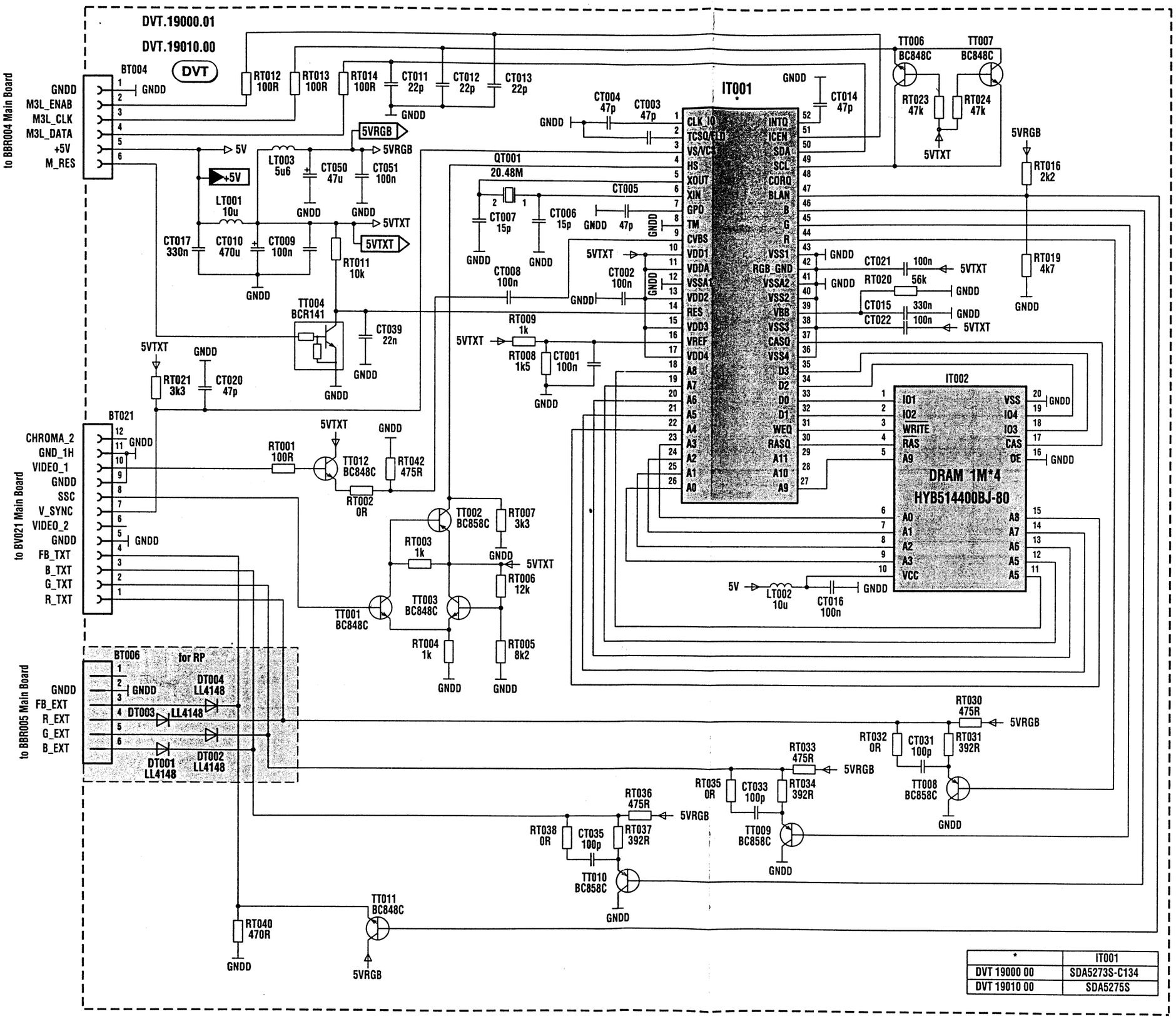

*	IT001
DVT 19000 00	SDA5273S-C134
DVT 19010 00	SDA5275S

SCART INTERFACE MODULE - MODULE INTERFACE PERITELEVISION - SCART INTERFACE - MODULO PRESA PERITEL - MODULO EUROTOMA

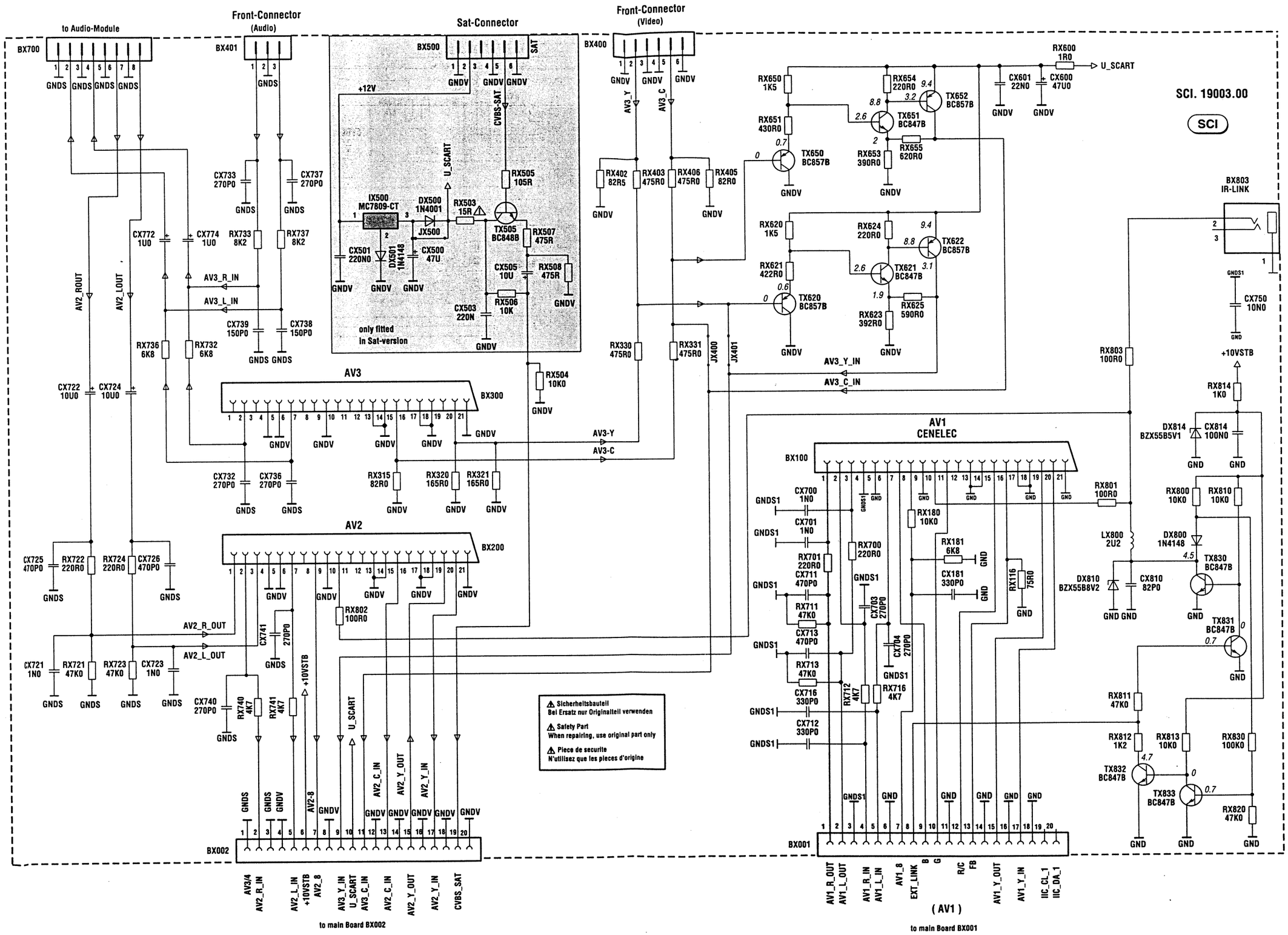

SCI 19003

COMPONENT SIDE - COTE COMPOSANTS - BESTÜCKUNGSSEITE
LATO COMPONENTI - LADO COMPONENTES

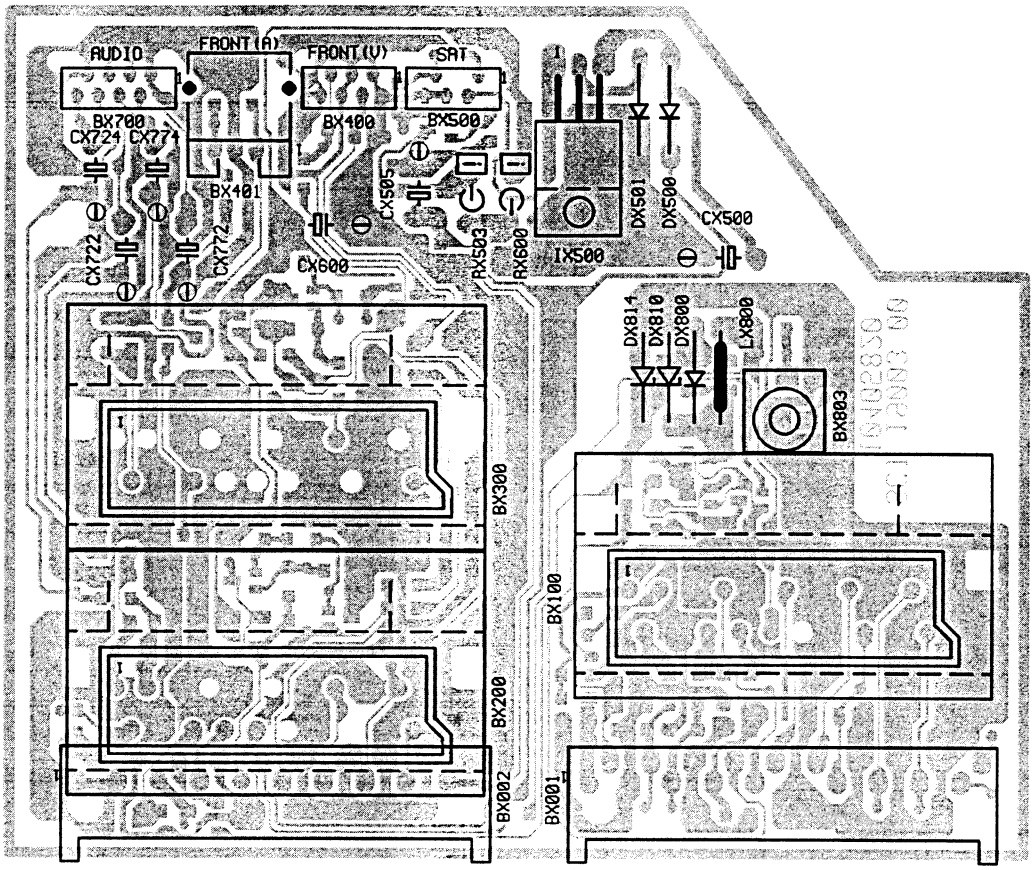

SOLDER SIDE - CÔTE SOUDURES - LÖTSEITE - LATO SALDATURE - LADO SOLDADURAS

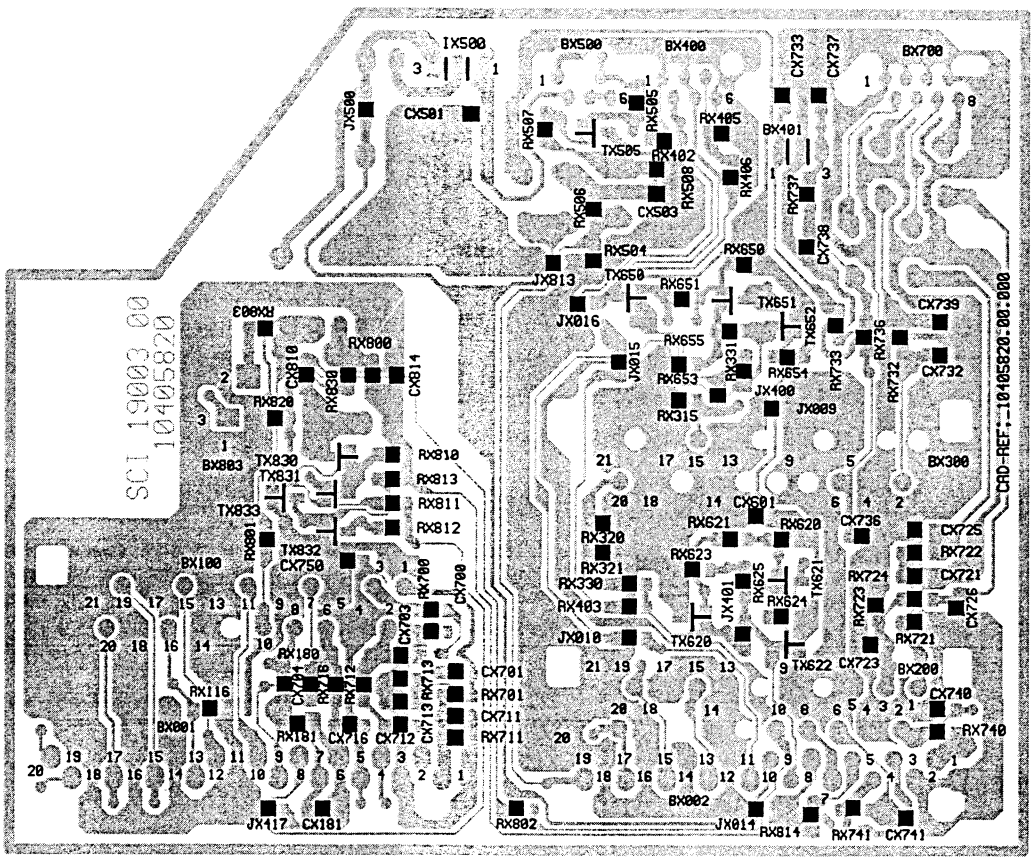

FRONT CONNECTOR BOARD - PRISES EN FACADE ET INTERCONNEXION DU CLAVIER - FRONT ANSCHLUSSPLATTE - PIASTRA CONNESSIONE FRONTALE - PLÁTINA MANDOS FRONTAL

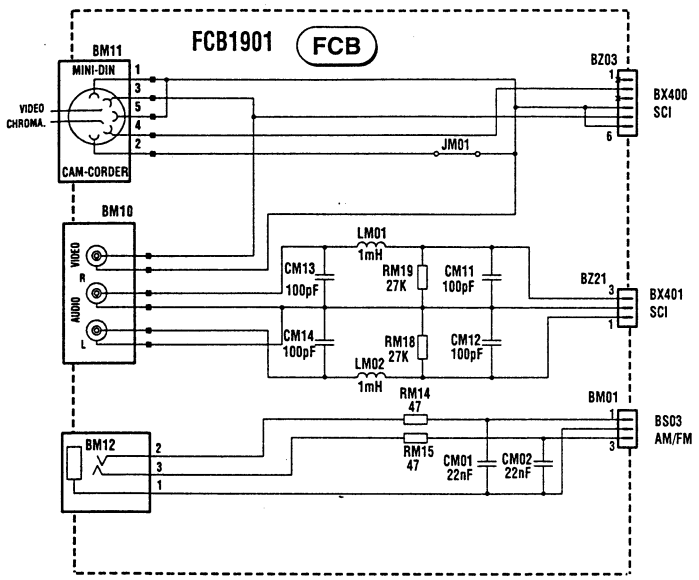

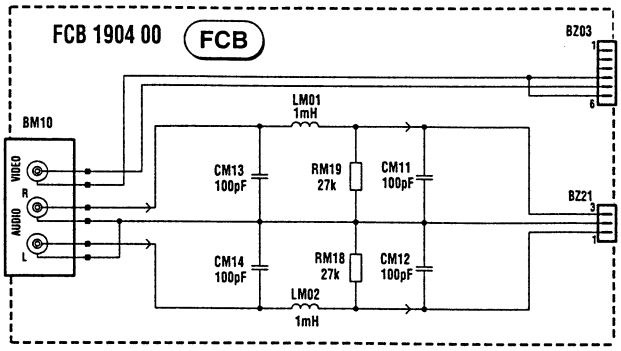

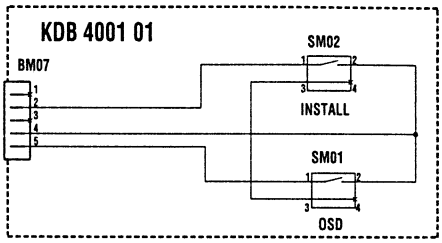

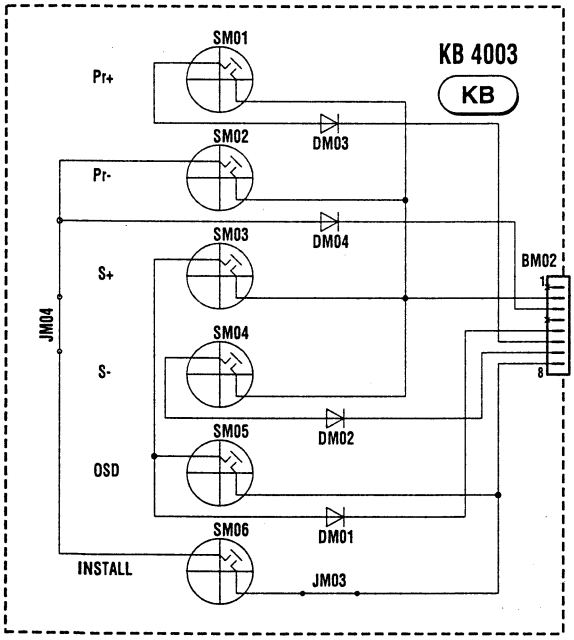

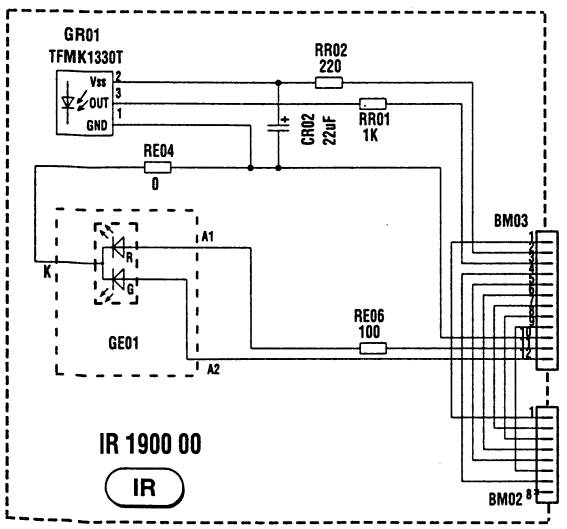

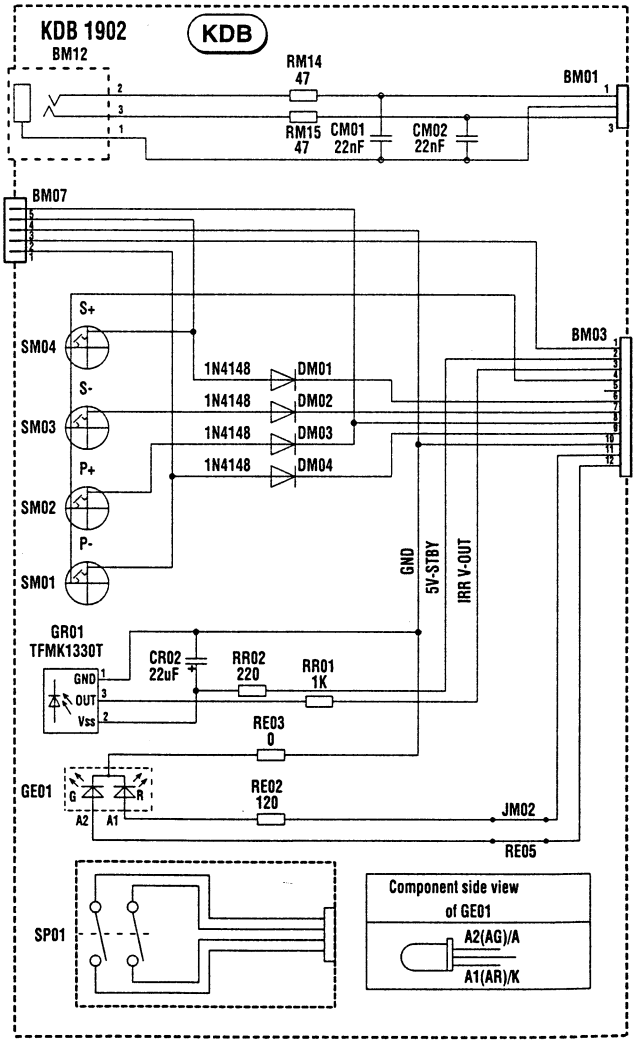

FCB 1901 - FCB 9069

COMPONENT SIDE - COTE COMPOSANTS - BESTÜCKUNGSSEITE - LATO COMPONENTI LADO COMPONENTES

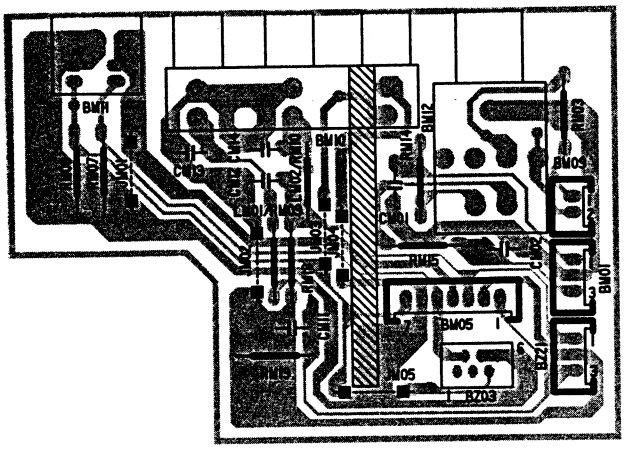

SOLDER SIDE - CÔTE SOUDURES - LÖTSEITE - LATO SALDATURE - LADO SOLDADURAS

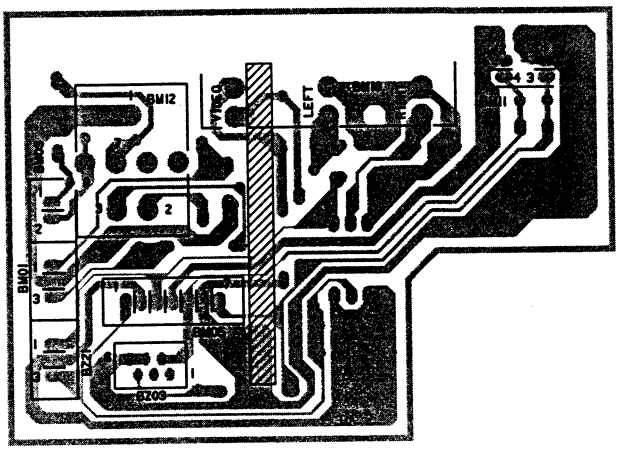

KDB 1902 - KDB 9003

COMPONENT SIDE - COTE COMPOSANTS - BESTÜCKUNGSSEITE - LATO COMPONENTI LADO COMPONENTES

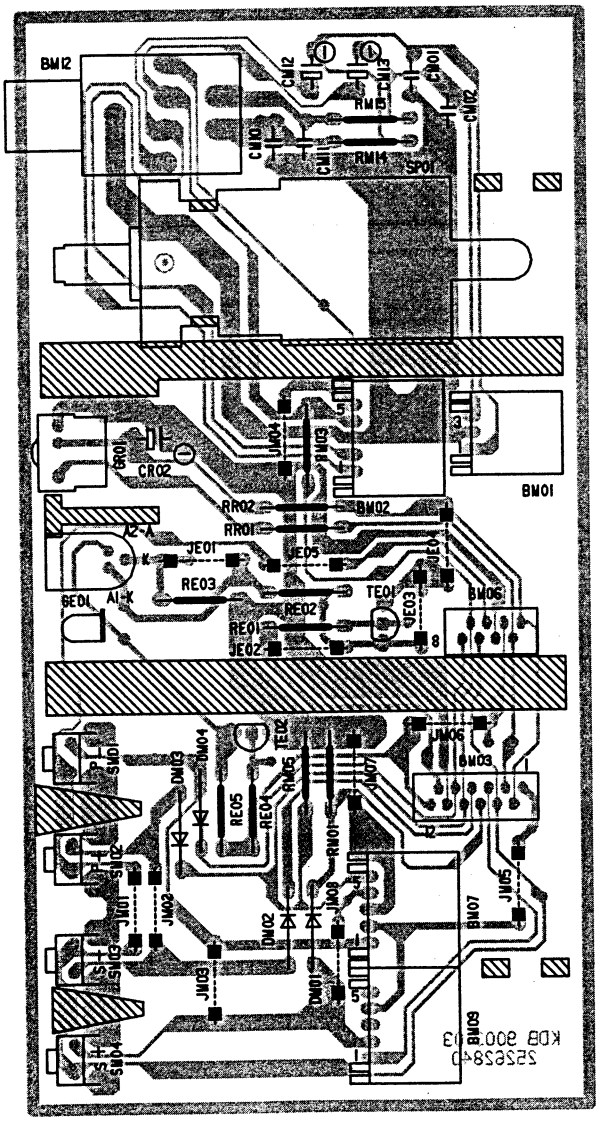

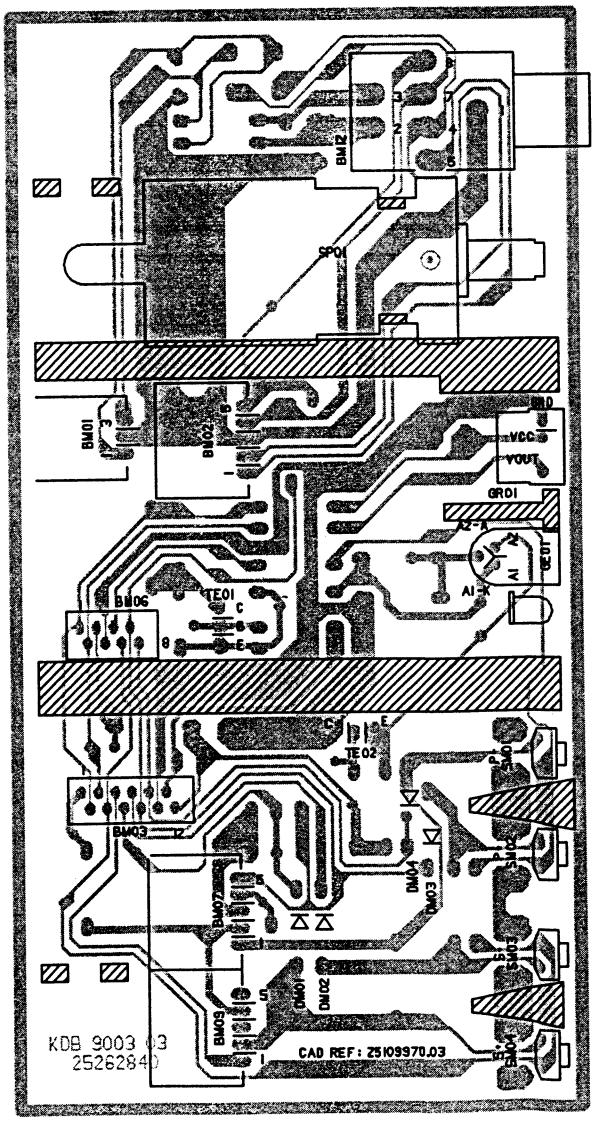

FCB 1904 - FCB 4015

COMPONENT SIDE - COTE COMPOSANTS - BESTÜCKUNGSSEITE - LATO COMPONENTI LADO COMPONENTES

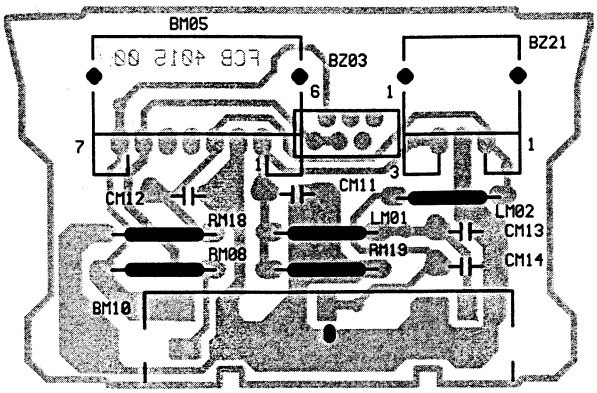

SOLDER SIDE - CÔTE SOUDURES - LÖTSEITE - LATO SALDATURE - LADO SOLDADURAS

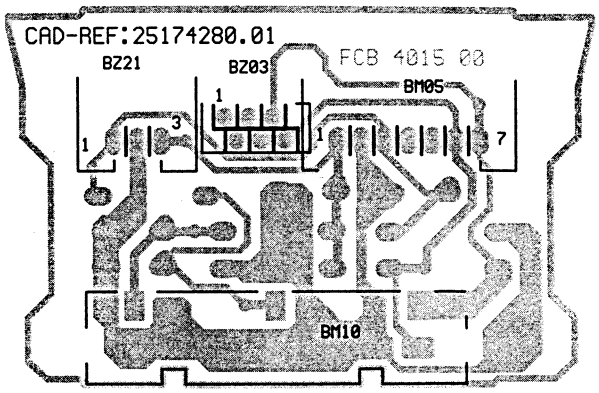

KB4003

COMPONENT SIDE - COTE COMPOSANTS - BESTÜCKUNGSSEITE - LATO COMPONENTI LADO COMPONENTES

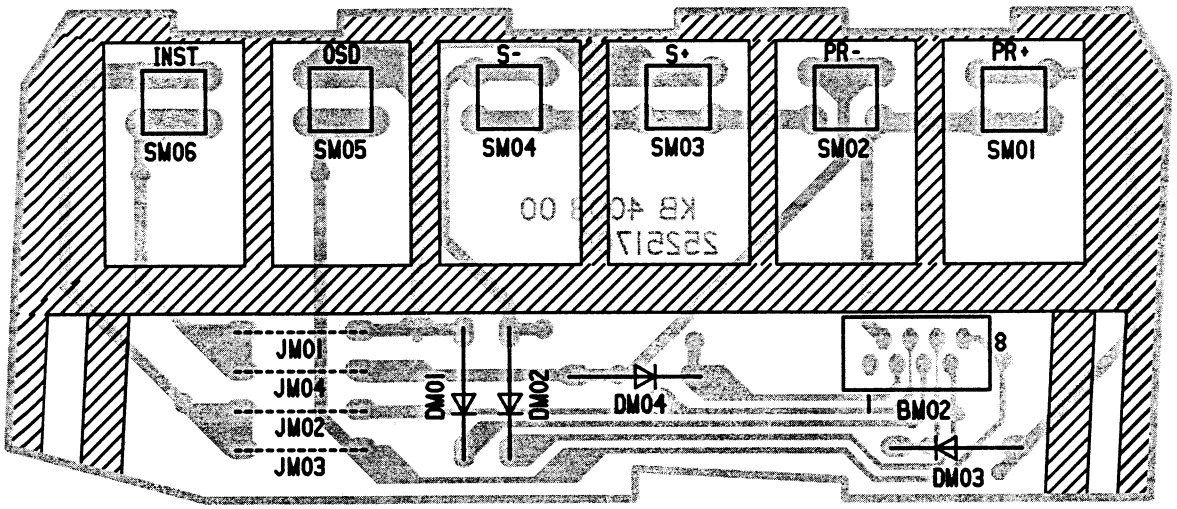

SOLDER SIDE - CÔTE SOUDURES - LÖTSEITE - LATO SALDATURE - LADO SOLDADURAS

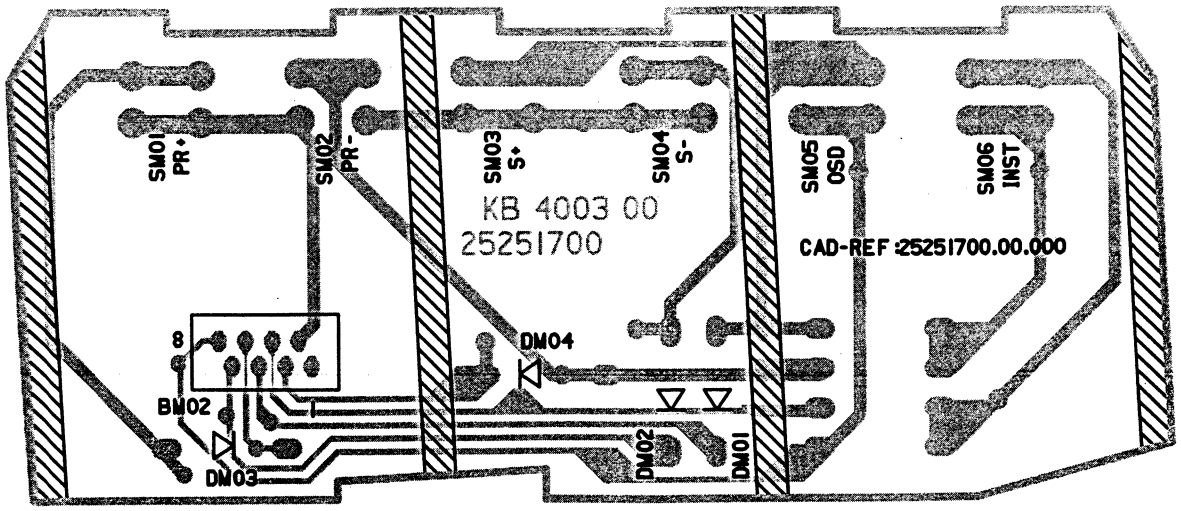

AUDIO SIGNAL/DOLBY MODULE - MODULE AUDIO/DOLBY - TON SIGNAL/DOLBY BAUSTEIN - MODULO AUDIO/DOLBY - MÓDULO AUDIO/DOLBY

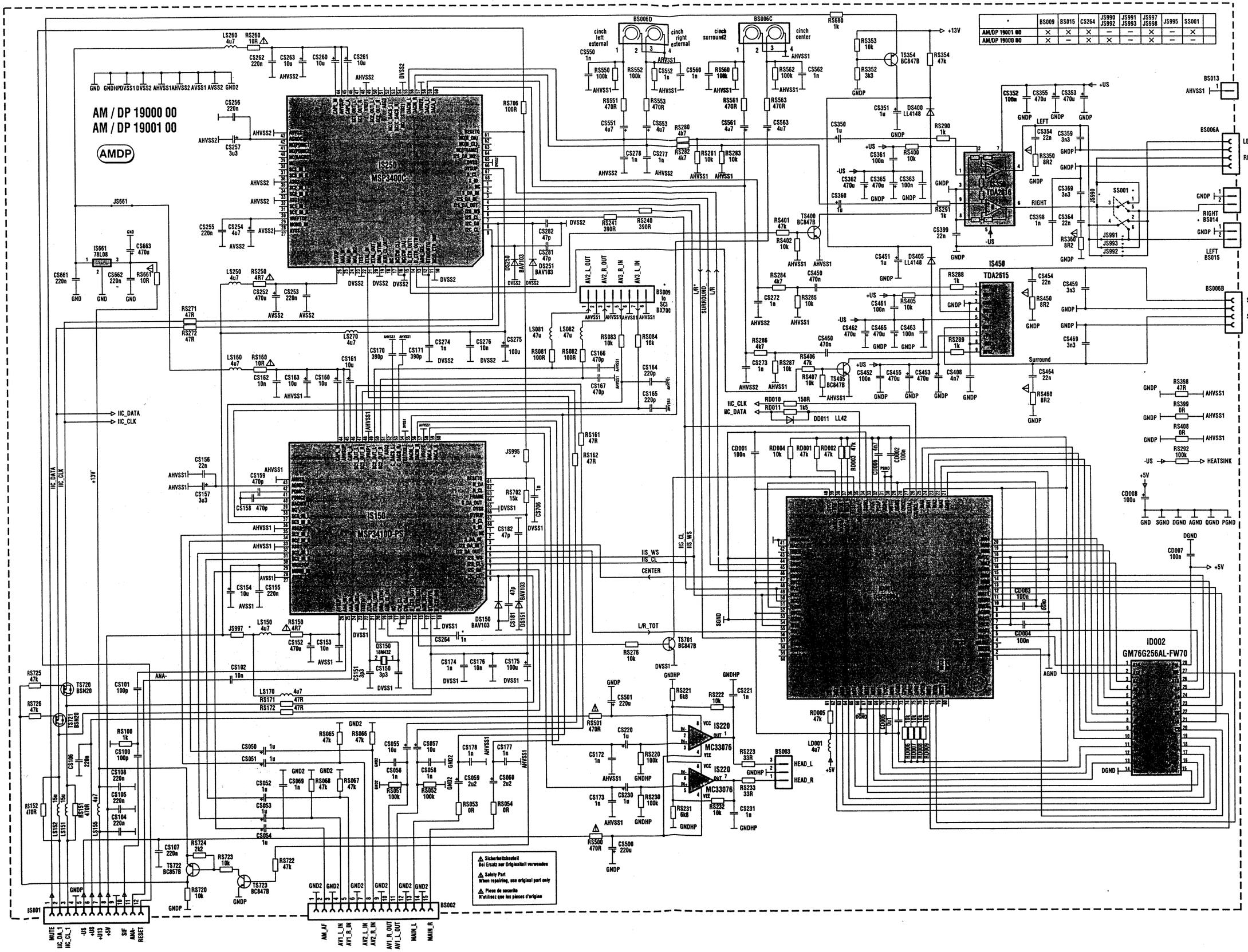

	BS009	BS015	CS264	JS990 JS992	JS991 JS993	JS997 JS998	JS995	SS001
AM/DP 19001 00	×	×	×	–	–	×	–	×
AM/DP 19000 00	×	–	×	×	–	×	–	–

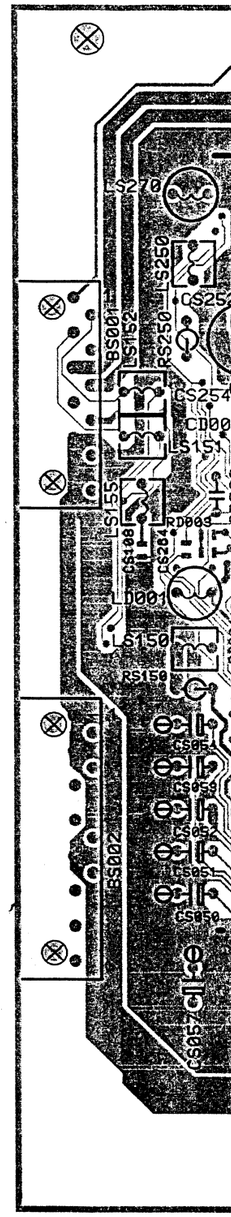

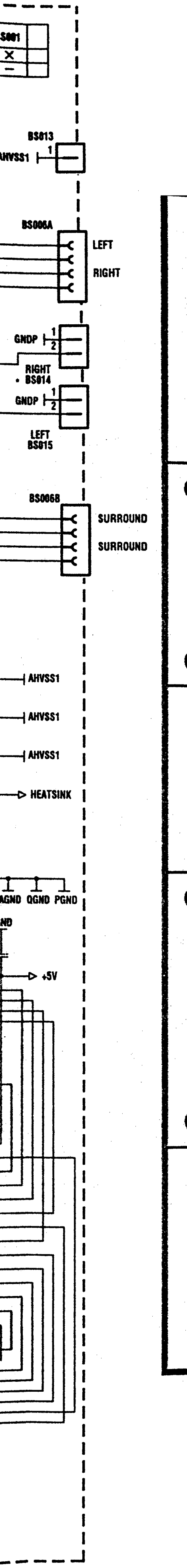

COMPONENT SIDE - COTE COMPOSANTS - BESTÜCKUNGSSEITE
LATO COMPONENTI - LADO COMPONENTES

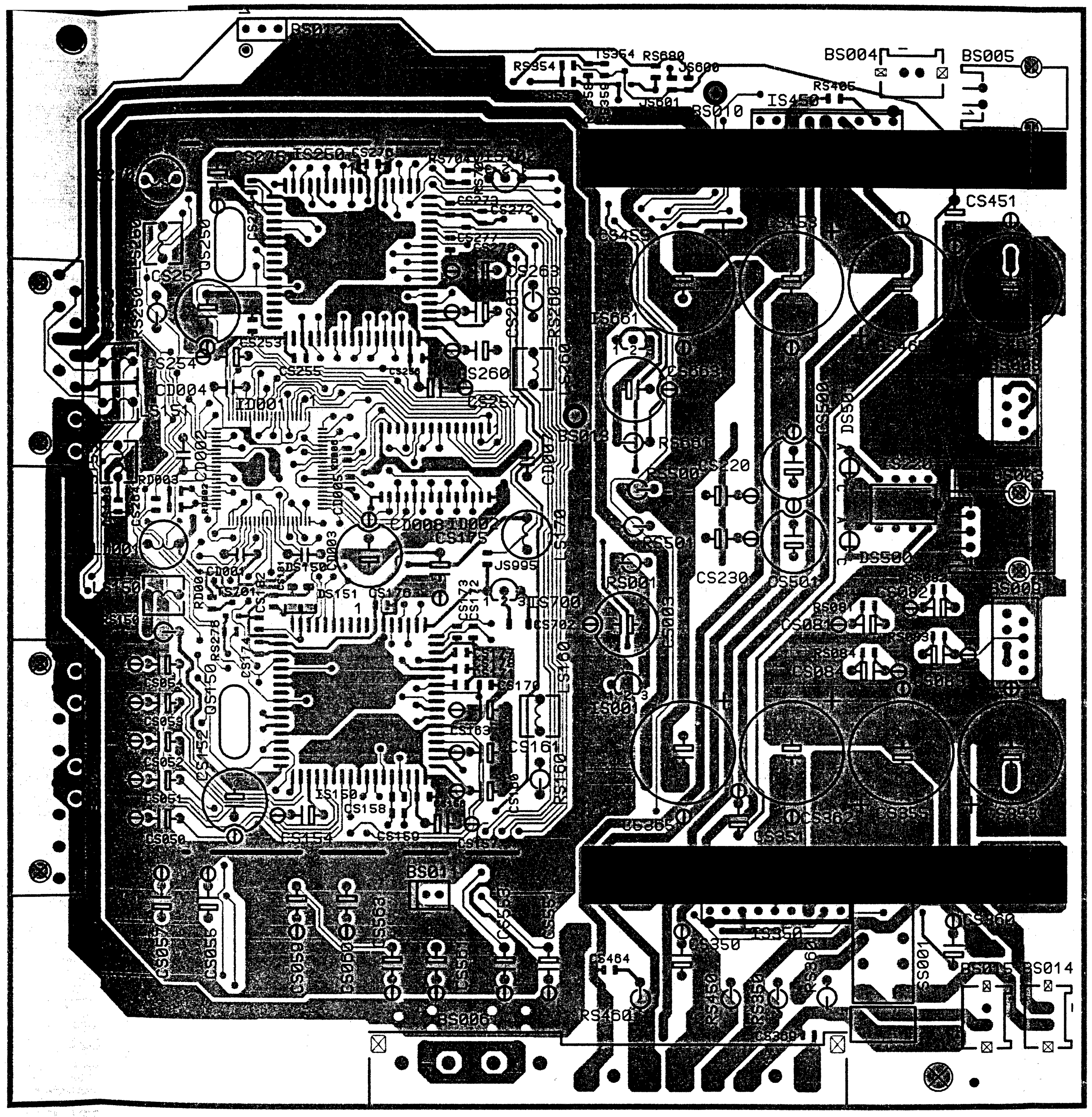

SOLDER SIDE - CÔTE SOUDURES - LÖTSEITE - LATO SALDATURE - LADO SOLDADURAS

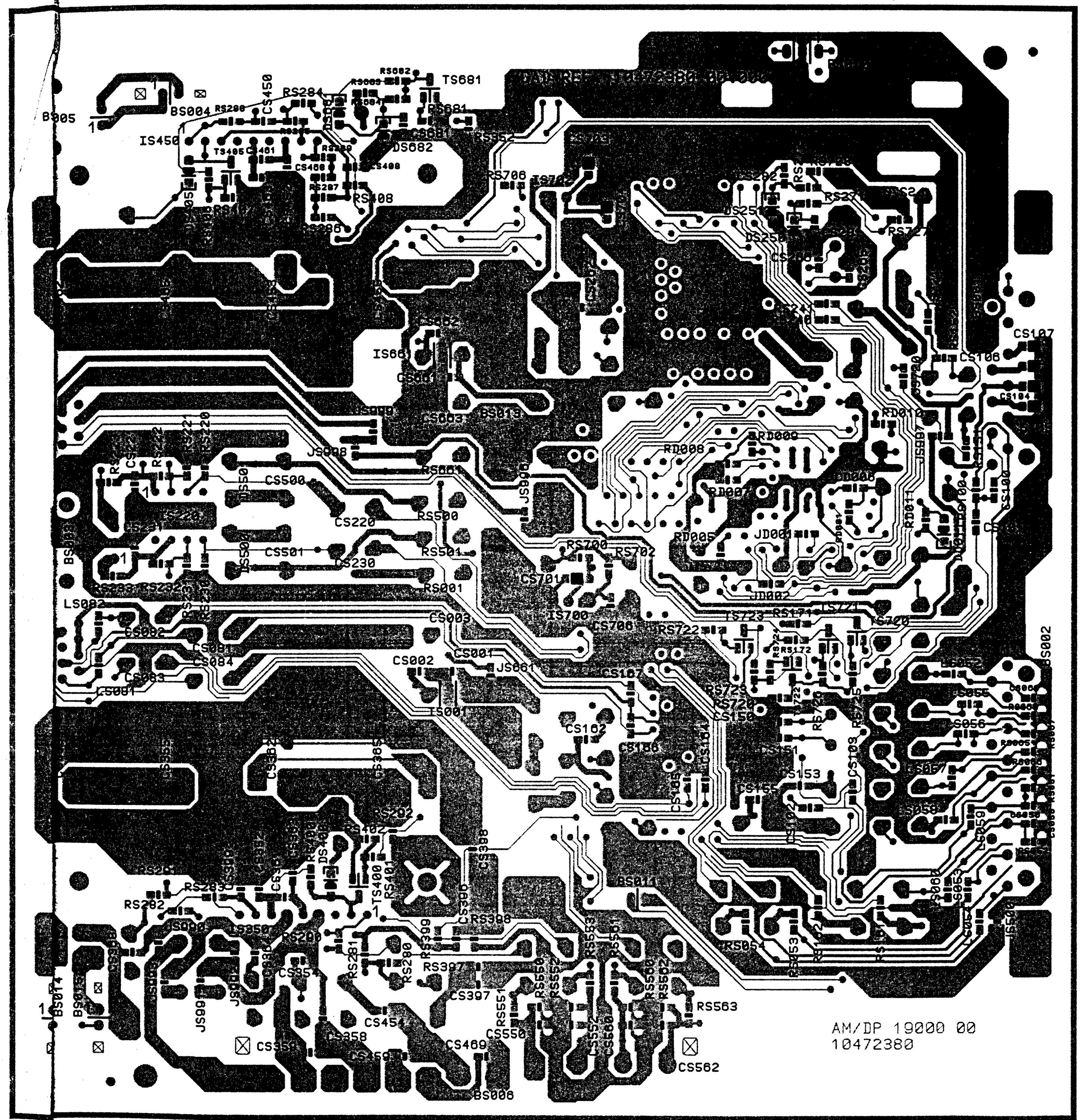

VHF / UHF TUNER CTT5000 (For information only)

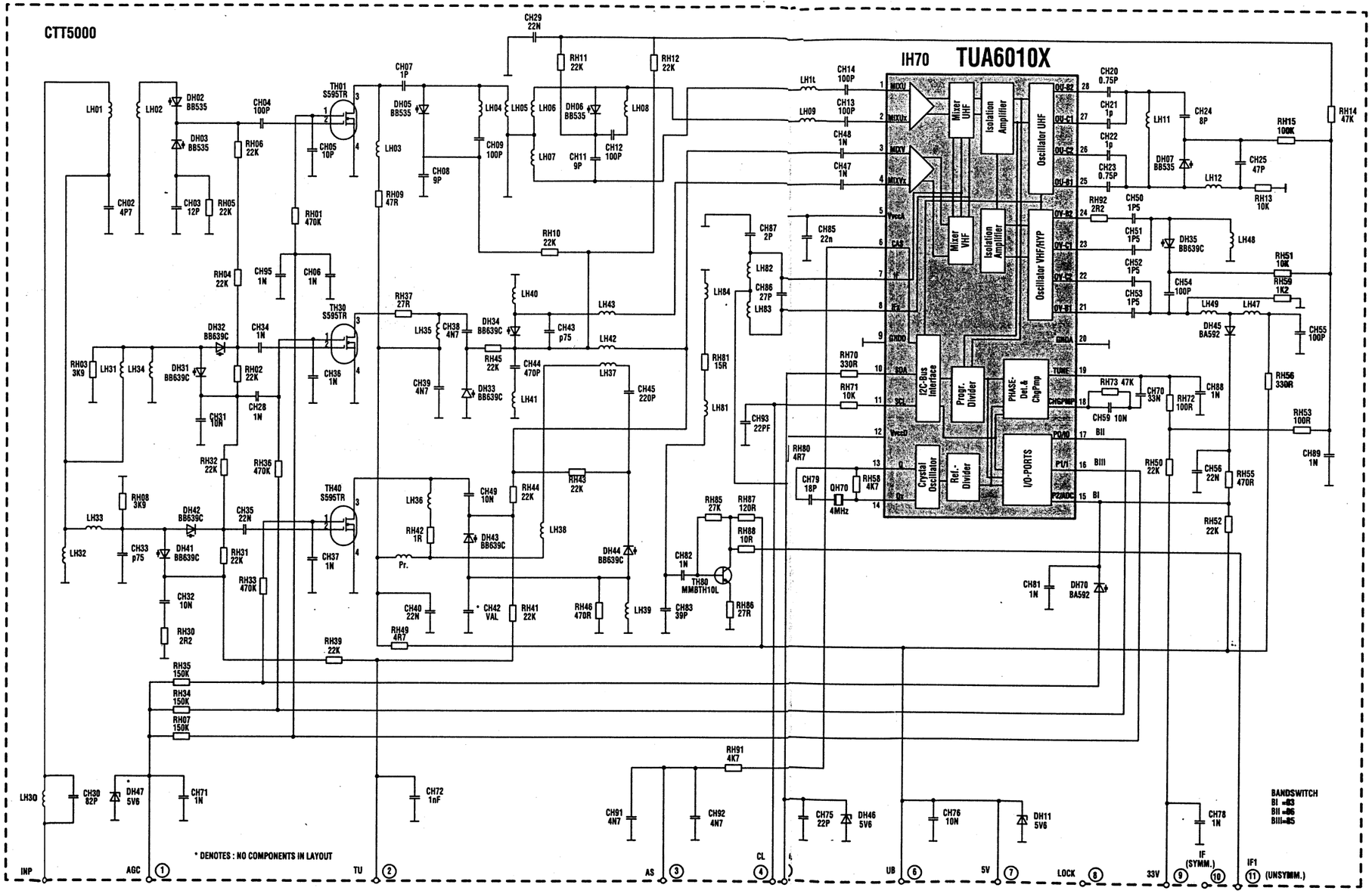

IS40 - MSP3410

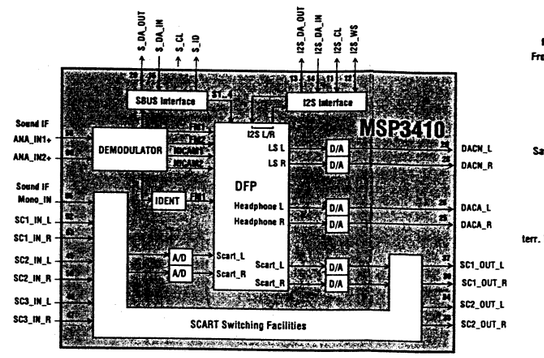

II50 - TDA9811

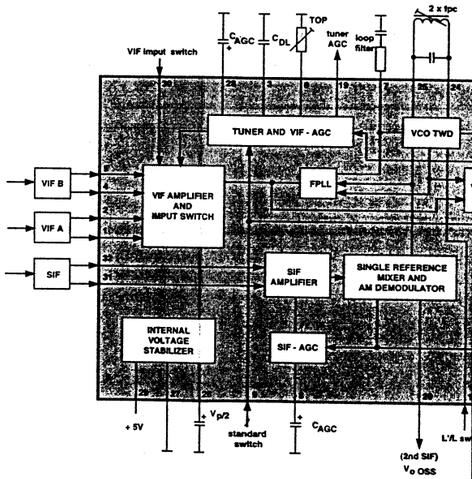

IV602 - TDA4665

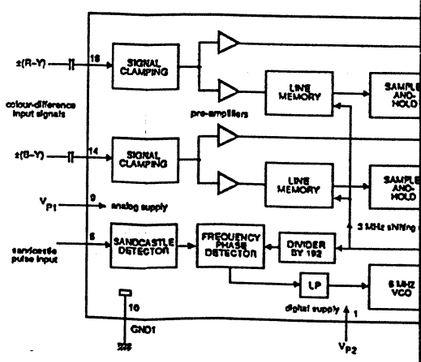

MSP3410

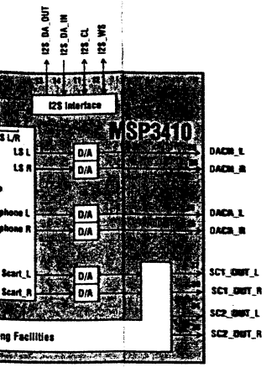

IX900 - TEA6415C

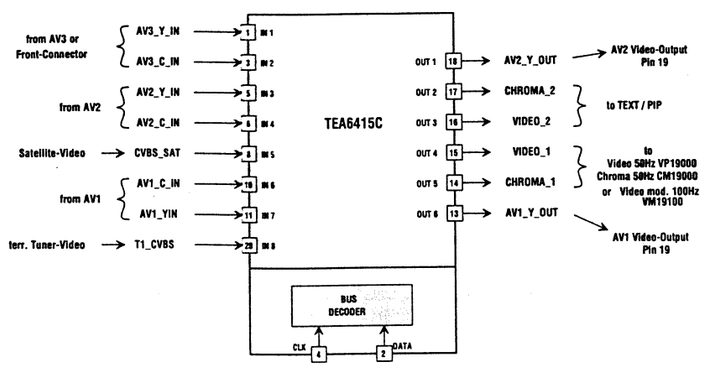

II50 - TDA9811

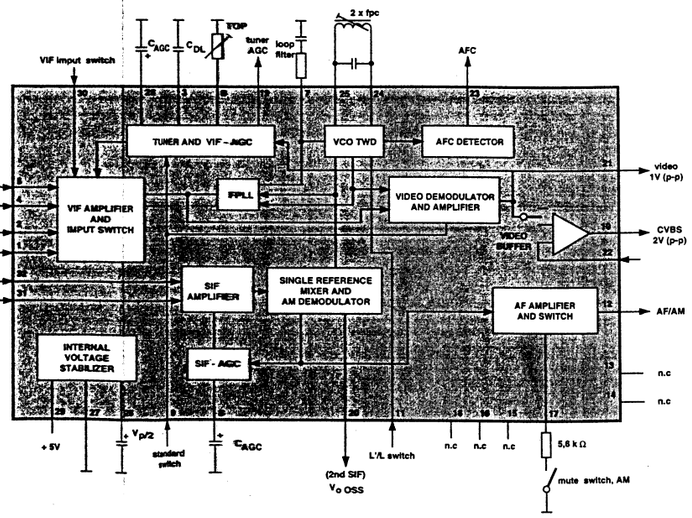

IV602 - TDA4665T

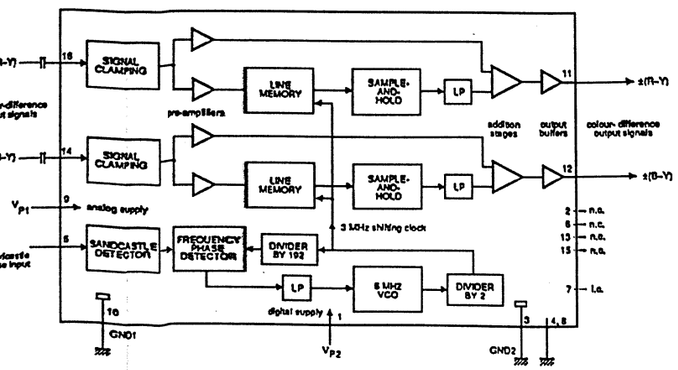

IV601 - TDA9143

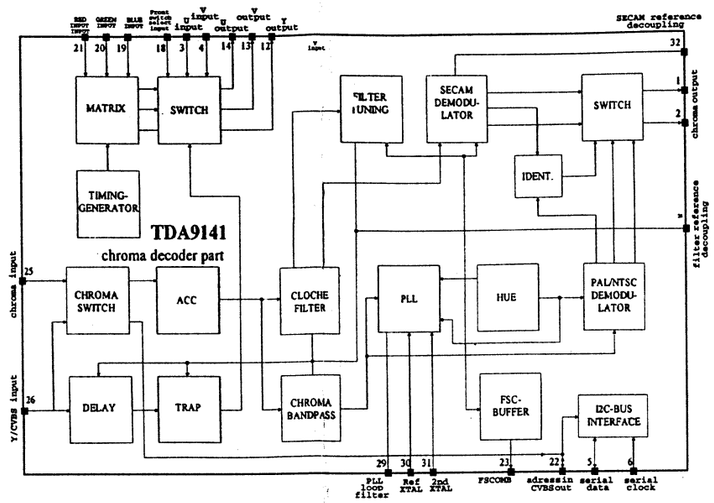

IR01 - ST90R92

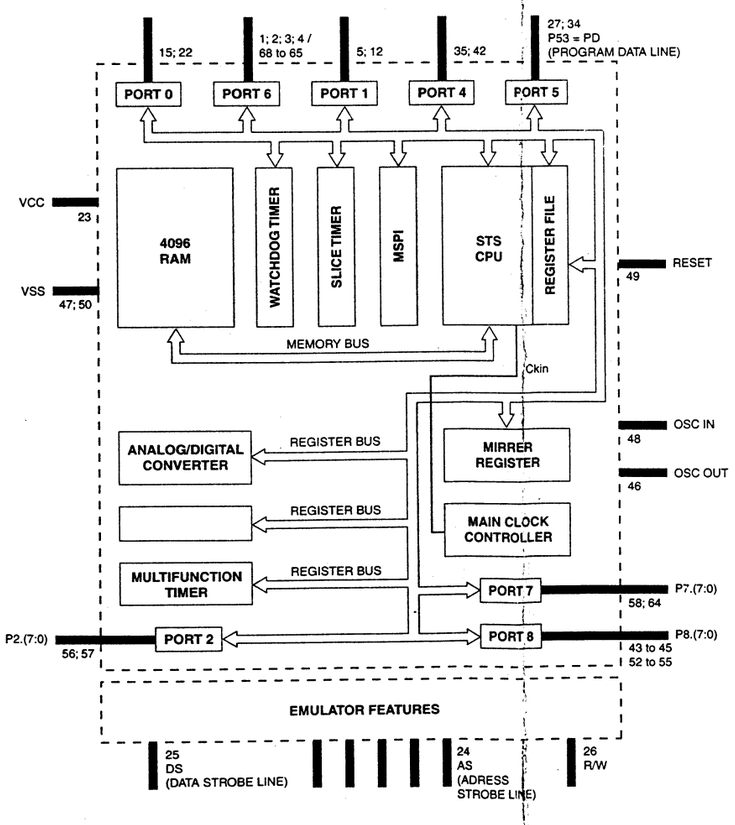

IV001 - STV2165

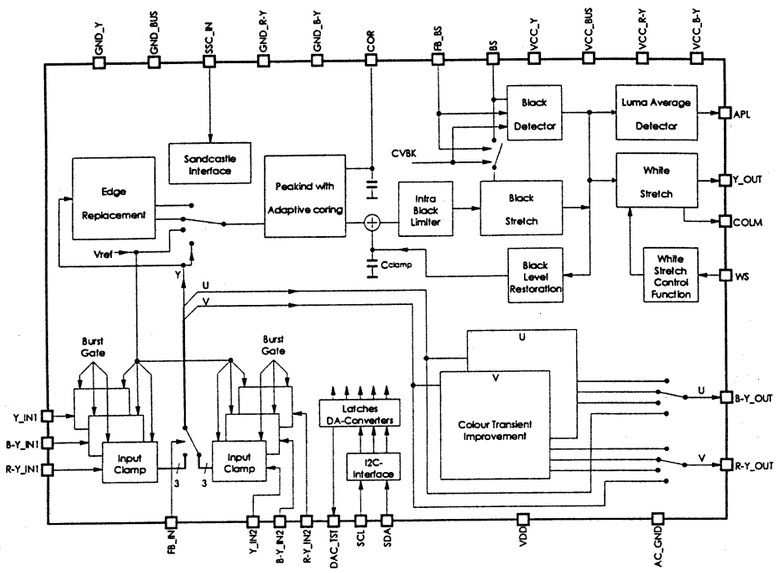

IV308 - DMU0

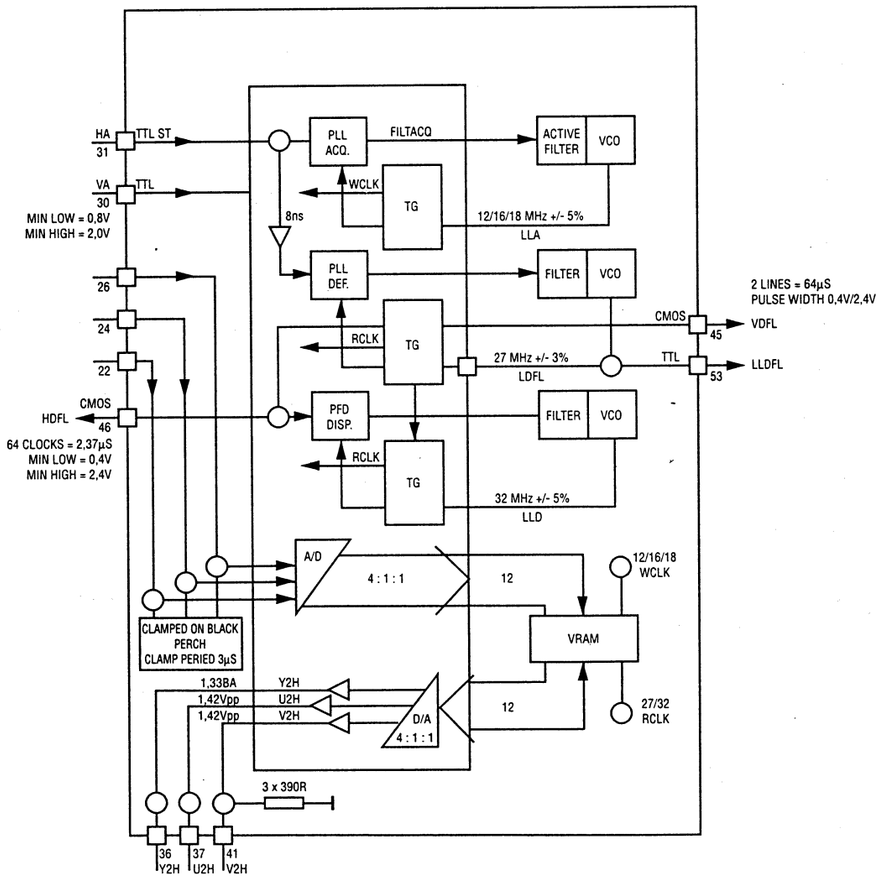

ALLGEMEINE INFORMATIONEN - LED VERHALTEN

LED BLINKZEICHEN

Übermittlung von Informationen
Die Fehler-Codes werden von der roten LED angezeigt.

Zählen Sie die Leuchtimpulse: Sie werden in zwei Blinkfolgen, abgetrennt durch eine Pause von 0,7 sek., eingeteilt und verschiedene Male wiederholt. Zwischen jeweils zwei Codes ist eine Pause von 1,7 sek.

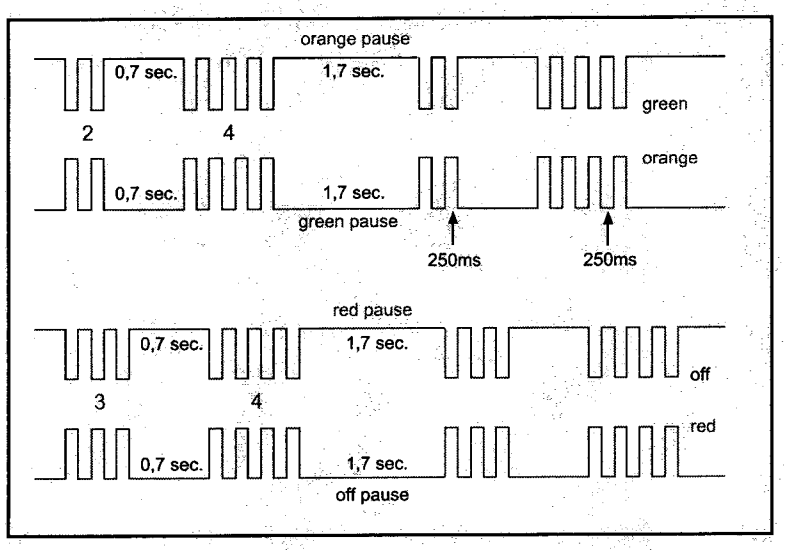

CODES	FEHLER
11	Audio MSP Prozessor antwortet nicht.
12	Zweiter Audio MSP Prozessor antwortet nicht.(Dolby)
13	Audio DSP Prozessor antwortet nicht. (Dolby)
14	IC STV2161/62 antwortet nicht
15	IC STV2151 / TDA9143 antwortet nicht
16	DMU0 Upconverter (Videomodul) antwortet nicht
17	Audio- oder Dolby-modul nicht erkannt
18	TEA6415C antwortet nicht (SCAR T Schalter)
19	Tuner CTT5000 antwortet nicht
21	I2C Bus1 data line ist auf low
22	I2C Bus2 data line ist auf low
23	I2C Bus1 clock line ist auf low
24	I2C Bus2 clock line ist auf low
25	Geschaltete 5V nicht vorhanden
26	Röhre wird nicht rechtzeitig warm
27	Ablenkung meldet 3 mal Fehler. (Problem auf Breathing Leitung)
29	DRAM des Megatext defekt
31	RAM antwortet nicht
32	Ein software-timer wurde angefordert,ist aber noch nicht bereit
33	STV 2165 (PSI 100Hz) antwortet nicht
34	NVM Chip antwortet nicht (X24C32)
35	+13V nicht vorhanden
36	NVM adresse nicht gefunden
37	Unerwarteter Zustand an NMI (Interrupt) line gefunden. (Mögliche Ursache = Röhren-Überschlag")
38	M3L Bus des Megatext blockiert
39	Megatext (SDA 5273) antwortet nicht
41	Bus1 (data line) nicht möglich zu reaktivieren
42	Bus2 (data line) nicht möglich zu reaktivieren
43	MCU (Motion Mastering Up-Converter) antwortet nicht
44	Konvergenz IC (STV2040) antwortet nicht
45	falsches V ideomodul (falscher MCU)
46	NVRAM für Konvergenz antwortet nicht
47	Bildmuster im Konvergenz-IC ist defekt
48	Bildmuster aus dem NVRAM ist defekt
49	Bildrohrtyp "R" ist eigestellt, aber kein Konvergenz-IC gefunden
51	PIP antwortet nicht
52	Falsches Videotextmodul.

ALLGEMEINE INFORMATIONEN

VORGEHENSWEISE

1 - BEIM EINSCHALTEN

Beobachten Sie das Verhalten der 2-farbigen LED: Merken Sie sich das Einschalt- verhalten und vergleichen es mit den normalen Zyklen.
Hierdurch kann die Zeit bis der Fehlerzeitpunkt und die zu überprüfende Stufe festgestellt werden.

2 - TROUBLE SHOOTING ABLAUF: LED-VERHALTEN

In bestimmten Fällen leuchtet die LED zum Übertragen einer Fehlerinformation auf:
LED Aufleuchten: Übertragung der Fehlerinformation
Zählen der Fehlerinformation: Kodiert in zwei Impulsbündeln, unterbrochen durch 0,7 s Pause.
Dieses wiederholt sich mehrere Male.

Sehen Sie in der Fehlercodetabelle

Diese Informationen sind genauer als Farbänderungen aber unvollständig, da verschiedene Ursachen denselben Code verursachen.

HINWEIS:
Im Service Mode ist es möglich die letzten Fehler-Codes aufzurufen, die sich in dem Fernsehgerät ereignet haben.

3 - FEHLERSUCHE

Funktionen der Stufen 1 und 2: Messungen mit dem Oszilloskop sind für die beiden separaten Vorgänge durchzuführen.

a - Das Gerät arbeitet ganz oder teilweise:
- Benutzen Sie die LED Informationen der Fehlersuchmethode 1 und 2.
Schauen Sie ebenfalls bei Fehlersuche nach Symptomen nach.

b - Das Fernsehgerät schaltet permanent oder periodisch ab:
- Beobachten Sie das LED-Verhalten (rotes Aufleuchten, konstantes orange gefolgt von Aufleuchten, usw.)
Wählen Sie das zutreffende Kästchen in der Spalte: Fehlersuche durch LED-Verhalten.

INFORMATIONEN

Fernsehgeräte mit dem Chassis ICC19 arbeiten teilweise auch ohne die Module DVT, Sound, CRT, Chroma (50Hz) und VM Video (100Hz).

Dieser Punkt kann hilfreich sein wenn das Videomodul das Gerät in den Schutz-Mode schaltet.

Sehen Sie in die Geräte Konfigurationstabelle

GENERAL INFORMATION - LED BEHAVIOUR

LED FLASHES

Message transmission.
The Error codes are signalled by the RED Standby LED.

Count number of flashes : error code is signalled in two burst separated by a 0.7 s pause and repeated several times.
There is 1.7 s between each code sequence .

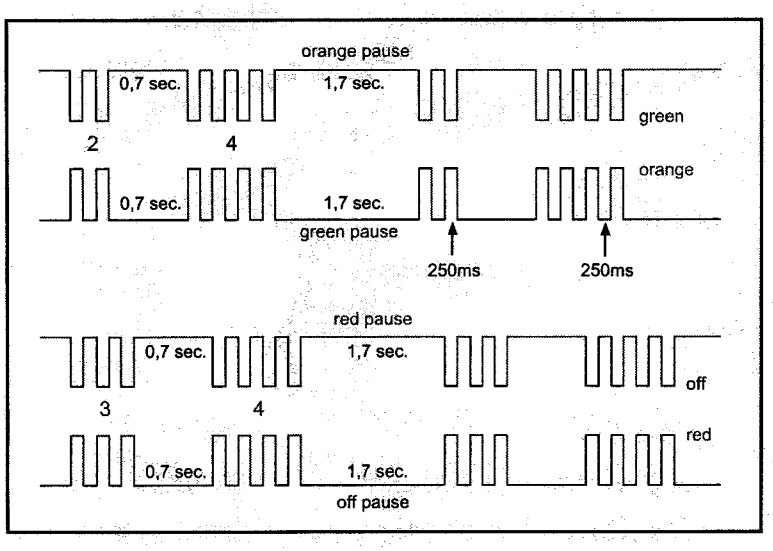

CODES	DEFAUT
11	1st Audio_MSP doesn't answer
12	2nd Audio-MSP doesn't answer
13	Audio-DSP doesn't answer
14	Video IC STV2161/2 doesn't answer
15	Chroma IC 2151/9143 doesn't answer
16	Upconverter DMU0 doesn't answer
17	Audio (or Dolby) module not detected
18	SCART IC TEA6415C doesn't answer
19	Tuner CTT5000 doesn't answer
21	I2C Bus1 data line held low
22	I2C Bus2 data line held low
23	I2C Bus1 clock line held low
24	I2C Bus2 clock line held low
25	Switched 5V not available
26	Tube doesn't get warm in time
27	Deflection detects >3 times protection (problem detected on "breathing" line)
29	DRAM memory of Megatext defect
31	RAM is full
32	A Software-timer has been requested, bus is not available yet
33	The PSI chip (STV2165) doesn't answer
34	The NVM (X24C32) chip doesnt answer
35	13V not available
36	Wrong addr. NVRAM passed to the bus-handler
37	Unexpected level on NMI (Interrupt) line found (possible cause : tube flashover)
38	M3LBus for Megatext is blocked
39	Megatext (SDA5273) doesn't answer
41	bus1 Data line not recoverable
42	bus2 Data line not recoverable
43	MCU (Motion Mastering Up-Converter) doesn't answer
44	Convergence IC (STV2040) doesn't answer
45	Defect "Video Module" is detected
46	"Default" NVRAM of DCU doesn't answer
47	Test Pattern chip of DCU defect
48	Test Pattern NVRAM convergence chip defect
49	Convergence module doesn't answer anymore
51	PIP Module doesn't answer
52	The Teletext module is not conform.

GENERAL INFORMATION

METHODOLOGY

1 - SWITCHING "ON" THE TV :

- Observe the behaviour of the two-coloured LED: note the various stages and compare them with the normal cycle of events.
By watching this, the point at which the problem arises and the part of the circuit which needs to be investigated can be identified.

2 -TROUBLE SHOOTING PROCEDURE: LED BEHAVIOUR

In certain cases a flashing LED signifies the transmission of an error code message:

LED flashes : message transmission.

Count the flashes : coded into two bursts separated by a pause of 0.7 s and repeated several times.

See the error code table.

This data is more precise than LED colour changes, however, since various fault conditions generate the same error code the information signalled may be imcomplete.

Please Note :
In the service mode, it is possible to consult a record of the last error codes which have occurred in the television set.

3 - FAULT FINDING :

Operation stages 1 and 2: an oscilloscope test is carried out according to two separate processes.

a - The television set operates fully or partially
- Use LED message observation fault finding methods 1 and 2. See also the fault related to fault finding by symptom.

b - The television set goes into permanent or cyclical security mode
- Observe LED behaviour (flashing red, stable orange followed by flashing, etc.).
Select the relevant box in the column (LED behaviour fault finding).

INFORMATION

The ICC19 television will partially operate without the DVT, SOUND, CRT, CHROMA (50 Hz) and VM video (100 Hz) modules remoded.
This point may be useful if the video module causes the TV to switch to security mode.

See the television configuration table.

www.manualscenter.com

[*pr76Y

FEHLERSUCHE IM RPC19

- Achtung! Jede der vorgeschlagenen Manipulationen muß bei abgeschaltetem Gerät durchgeführt werden (Hauptnetzschalter aus).
  Alle Arbeiten, die bei eingeschaltetem Gerät durchgeführt werden, können Bauteile zerstören!
- Einen Trenntrafo verwenden.

Überprüfung der digitalen konvergenzeinheit

- Der IC sollte eine ordnungsgemäße 5 V-Versorgung besitzen.
- PWAT Pin 26 von IK01 muß >+4 V sein, andernfalls bleibt der IC im Reset.
- Die +-15 V-Versorgung von PS muß anliegen und >13 V sein.
- H- und V-Synchronisierung müssen an Pin 22 und Pin 55 von IK01 anliegen
- Am Pin 40 (REFO) muß +1 V anliegen.
- An den Pins DABV, DAGV und DARV (43, 44 und 45) von IK01 muß +1 V anliegen.
- An den Pins DABH, DAGH und DARH (49 und 50) von IK01 muß +1 V anliegen.
- An Pin 14 (ECLK) von IK01 muß ein 8,5 MHz-Takt anliegen.

Überprüfen des Konvergenznetzeiles

Arbeiten an einem defekten Gerät sind nur mit einem **Trennnetztransformator** zulässig.
Wenn kein Konvergenzbild am Bildschirm angezeit wird, so können Sie das Konvergenznetzteil für sich prüfen.

Führen Sie folgende Schritte durch:

1. Netz ausschalten.
2. Die Verbindung von BP260 zwischen der DCU-Platine und der Konvergenz-Spannungsquelle abziehen.
3. Einen Widerstand von 270R/10W zwischen +15 V und - 15 V anschließen (zum Beispiel zwischen die Kathode von DP267 und der Anode von DP265).
4. Den Kollektor und den Emitter von TP238 miteinander verbinden.
5. Netz einschalten.

Name / Position	DC-Wert(V)
CP210	298,0
DP213	33,2
CP240	16,9
CP243	-25,4
CP233	15,3
Pin 5 von IP250	30,3
Pin 4 von IP250	0,0
Kollektor von TP233	0,9
CP268	14,9
CP266	-14,9
CP262	58,7
CP264	57,9
CP271	0,0
DCU_SAFE	0,0
RP271	0,0
Pin 1 von TP250	0,0
CP210	298,0

TROUBLESHOOTING RP C19

- All of the following tests must be carried out with the MAINS switched OFF.

Any operations carried out with the MAINS switched ON may lead to components being destroyed.

- Use isolating mains transformer.

DIGITAL CONVERGENCE UNIT CHECK

- IC should have correct +5V supply
- PWAT pin 26 of IK01 must be >+4V otherwise the IC is kept in reset.
- The + - 15V from the PS must be present and >13V
- H and V sync must be present pin nr. 22 and 55 of IK01
- at the pin REFO nr. 40 + 1V must be present.
- at the pins DABV, DAGV, DARV, nr.43, 44and 45 of IK01 +1V must be present
- at the pins DABH, DAGH, DARH nr.48, 49 and 50 of IK01 +1V must be present
- at the pin ECLK nr. 14 of IK01 a 8.5Mhz clock must be present

DIGITAL CONVERGENCE UNIT POWER SUPPLY TROUBLESHOOTING

If you have not a convergence picture on the screen it's possible to check the convergence power supply for itself.

Do the following steps.

1. Switch off the mains
2. Remove the connection of BP260 between the DCU board and the convergence power supply
3. Connect a resistor of 270R/10W between +15V and -15V. For examplee cathode of DP267 and anode of DP265.
4. Make a short circuit between collector and emitter of TP 238.
5. Switch on the mains.

Name / Position	DC value / V
CP210	298.0
DP213	33.2
CP240	16.9
CP243	-25.4
CP233	15.3
Pin 5 of IP250	30.3
Pin 4 of IP250	0.0
Collector of TP233	0.9
CP268	14.9
CP266	-14.9
CP262	58.7
CP264	57.9
CP271	0.0
DCU_SAFE	0.0
RP271	0.0
Pin 1 of TP250	0.0
CP210	298.0

ÜBERPRÜFEN DER STROMVERSORGUNG UND AUFFINDEN EINES SCHUTZSCHALTUNGSFEHLERS

⚠ Achtung! Jede der vorgeschlagenen Manipulationen muß bei abgeschaltetem Gerät durchgeführt werden (Hauptnetzschalter aus).

Alle Arbeiten, die bei eingeschaltetem Gerät durchgeführt werden, können Bauteile zerstören!

Für die Analyse von Schutzschaltungsproblemen kann folgende Konfiguration verwendet werden.
In diesem Zustand arbeitet die Stromversorgung in normalem Regelzyklus, jedoch ohne Ablenkung und ohne Schutzschaltungsinformationen, damit der Grund für Probleme gefunden werden kann.

· Haupschalter aus
· CP170 Kurzschluß (K/6)*
· JL010 entfernen (M8)* oder Pin6 von LL08 ablöten
· Widerstand 75 Ohm (4W) zwischen +Vs und -Vs löten (L.M/4-5)*

↓

· Gerät eingeschaltet: Mit folgender Konfiguration gemessen

↓

U Syst :	50 Hz 131V	50Hz 132	50Hz 137V	100Hz 134V	100 Hz 137V	100 Hz 140V
Usyst (P/5)* (V+/-5V)	131.5	133	138	134.3	141	140
U vert / CP130 (P/4)* (V)	13	14.2	14.2	12.7	12.8	11.8
+Us / -Us (L/5-4)* (V)	6.4	6.4	6.4	8	8.3	6
7V / CP140 (J/3-4)* (V)	4.3	8.6	8.6	6.8	7.4	6.4
10V SBY/ K DP133 (N/5)* (V)	10.6	11.2	11.2	10.2	10.4	9.3
Vcc1 / 44-IV001 (J/7)* (V)	7.8	7.9	7.9	7.9	7.9	7.8
UVFB / K DL043 (K/8)* (V)	13.3	14.5	14.5	12.7	12.8	11.1
13V / CL042 (J/8)* (V)	0	0	0	0	0	0
200V / CL046 (P/6)* (V)	0	0	0	0	0	1.1
5V / CP143 (H/3)* (V)	0	0	0	0	0	0.2

(*) Lage des Bauelements

Schaltbild nur von der Schutzschaltung.

POWER SUPPLY CHECK AND FIND «PROT» FAILURE

All of the following tests must be carried out with the MAINS switched OFF.

Any operations carried out with the MAINS switched ON may lead to components being destroyed.

to analyse a «PROT» fault condition it is possible to use the following test configuration.
In this configuration the power supply will be working with its normal regulation loop, the deflection stage and any "PROT" information is disabled in order to locate the cause of the problem.

- MAINS switched «OFF»
- CP170 short-circuited (K/6)*
- JL010 removed (M/8)* or desolder Pin 6 of DST (LL08)
- Connect a R= 75 Ohms (4W) between +Vs and -Vs (L-M/4-5)*

↓

- Switch «ON» TV : Measure the following voltages.

↓

U Syst :	50 Hz 131V	50Hz 132	50Hz 137V	100Hz 134V	100 Hz 137V	100 Hz 140V
Usyst (P/5)* (V+/-5V)	131.5	133	138	134.3	141	140
U vert / CP130 (P/4)* (V)	13	14.2	14.2	12.7	12.8	11.8
+Us / -Us (L/5-4)* (V)	6.4	6.4	6.4	8	8.3	6
7V / CP140 (J/3-4)* (V)	4.3	8.6	8.6	6.8	7.4	6.4
10V SBY/ K DP133 (N/5)* (V)	10.6	11.2	11.2	10.2	10.4	9.3
Vcc1 / 44-IV001 (J/7)* (V)	7.8	7.9	7.9	7.9	7.9	7.8
UVFB / K DL043 (K/8)* (V)	13.3	14.5	14.5	12.7	12.8	11.1
13V / CL042 (J/8)* (V)	0	0	0	0	0	0
200V / CL046 (P/6)* (V)	0	0	0	0	0	1.1
5V / CP143 (H/3)* (V)	0	0	0	0	0	0.2

(*) Components location

ALLGEMEINE INFORMATIONEN

VORGEHENSWEISE

1 - BEIM EINSCHALTEN

Beobachten Sie das Verhalten der 2-farbigen LED: Merken Sie sich das Einschalt- verhalten und vergleichen es mit den normalen Zyklen.
Hierdurch kann die Zeit bis der Fehlerzeitpunkt und die zu überprüfende Stufe festgestellt werden.

2 - TROUBLE SHOOTING ABLAUF: LED-VERHALTEN

In bestimmten Fällen leuchtet die LED zum Übertragen einer Fehlerinformation auf:
LED Aufleuchten: Übertragung der Fehlerinformation
Zählen der Fehlerinformation: Kodiert in zwei Impulsbündeln, unterbrochen durch 0,7 s Pause.
Dieses wiederholt sich mehrere Male.

Sehen Sie in der Fehlercodetabelle

Diese Informationen sind genauer als Farbänderungen aber unvollständig, da verschiedene Ursachen denselben Code verursachen.

HINWEIS:
Im Service Mode ist es möglich die letzten Fehler-Codes aufzurufen, die sich in dem Fernsehgerät ereignet haben.

3 - FEHLERSUCHE

Funktionen der Stufen 1 und 2: Messungen mit dem Oszilloskop sind für die beiden separaten Vorgänge durchzuführen.

a - Das Gerät arbeitet ganz oder teilweise:
- Benutzen Sie die LED Informationen der Fehlersuchmethode 1 und 2.
Schauen Sie ebenfalls bei Fehlersuche nach Symptomen nach.

b - Das Fernsehgerät schaltet permanent oder periodisch ab:
- Beobachten Sie das LED-Verhalten (rotes Aufleuchten, konstantes orange gefolgt von Aufleuchten, usw.)
Wählen Sie das zutreffende Kästchen in der Spalte: Fehlersuche durch LED-Verhalten.

INFORMATIONEN

Fernsehgeräte mit dem Chassis ICC19 arbeiten teilweise auch ohne die Module DVT, Sound, CRT, Chroma (50Hz) und VM Video (100Hz).

Dieser Punkt kann hilfreich sein wenn das Videomodul das Gerät in den Schutz-Mode schaltet.

Sehen Sie in die Geräte Konfigurationstabelle

BEHAVIOUR OF ICC19 WITHOUT CERTAIN MODULES ARE FITTED OR REMOVED

CONFIGURATION				ERROR CODE	ALL VOLTAGES	Signal at pin 19 BV011	Signal at pin 2-4-6 BV001	picture
VM	AM-FM	DVT	CRT					
without	without	without	without (1)	17	ok (1)	no	no	no
with	without	without	without (1)	17	ok (1)	no	no	no
with	with	without	without (1)	39	ok (1)	no	no	no
with	with	with	without (1)	26	ok (1)	ok	no	no
with	without	with	with	17	ok	ok	ok	ok
with	with	without	with	39	ok	ok	ok	ok (2)
without	with	with	with	15	ok	noise	pulse 100Hz	no

(1) : If the CRT is not connected, the voltage across CL046 will increase up to 250V instead 202V, this is due to the lack of a discharge path. Before to reconnecting BL050 and BP110 it is **imperative to discharge** CL046 with a resitor (22k or 33k).

(2) : In this case, the picture will only be visible after 1mn.

VERHALTEN DES CHASSIS ICC19 MIT EINZELNEN GEZOGENEN MODULEN ODER KOMPLETT OHNE MODULE

KONFIGURATION				FEHLER CODE	ALLE SPANNUNGEN	Signal an Pin 19 BV011	Signal an Pin 2-4-6 BV001	Bild
VM	AM-FM	DVT	CRT					
ohne	ohne	ohne	ohne (1)	17	ok (1)	nein	nein	nein
mit	mit	ohne	ohne (1)	17	ok (1)	nein	nein	nein
mit	mit	ohne	ohne(1)	39	ok (1)	nein	nein	nein
mit	mit	mit	ohne (1)	26	ok (1)	ok	nein	nein
mit	ohne	mit	mit	17	ok	ok	ok	ok
mit	mit	ohne	mit	39	ok	ok	ok	ok (2)
ohne	mit	mit	mit	15	ok	Rauschen	Frequenz.100Hz	nein

(1) : Wenn das CRT Modul nicht angeschlossen ist, erhöht sich die Spannung an CL046 auf über 250V anstatt 202V. Der Kondensator wird nicht entladen. Bevor Sie BL050 und BP110 wieder anschließen, muß CL046 unbedingt mit einem Widerstand (22k oder 33k) entladen werden.
(2) : In diesem Fall wird das Bild nach 1 Min sichtbar.

ICC19 100 Hz - BASIC- / IM- / MM- SCENIUM Version

tube name	description	CT-Part		DST	Usys jumper	Usys	Version
A66EGW 48X322	4/3 28"MP INVAR BSVM	CT 19101 34 CT 19105 37	10362880 10351530	10460360 10468070	JP915 JP914	134V 137V	ICC19 IM ICC19 IM
A59EGD048X322	4/3 25"SF INVAR BSVM	CT 19105 37	10351530	10468070	JP914	137V	ICC19 IM
A68EGD038X322	4/3 29"SF INVAR BSVM	CT 19105 37 CT 19152 37	10351530 10520610	10468070 10510870	JP914 JP914	137V 137V	ICC19 IM ICC19 MM
A66EHJ 48X 12	4/3 28"MP AK; no BSVM	CT 19103 34	10556010	10551170	JP915	134V	ICC19 BASIC
A68EGV038X322	4/3 29"SF SS INVAR BSVM	CT 19155 37	10562010	10551150	JP914	137V	ICC19 IM/MM
A80AJA 16X120	4/3 33"MP INVAR BSVM	CT 19156 37	10561990	10510870	JP914	137V	ICC19 IM
A80EJA 16X122	4/3 33"MP INVAR BSVM	CT 19156 37	10561990	10510870	JP914	137V	ICC19 IM
A90AFX 16X120	4/3 37"MP INVAR BSVM	CT 19156 37	10561990	10510870	JP914	137V	ICC19 IM
W66EGV023X122	16/9 28"SF INVAR BSVM	CT 19111 34	10444810	10468160	JP915	134V	ICC19 IM
W76EGV023X122	16/9 32"SF INVAR BSVM	CT 19111 34	10444810	10468160	JP915	134V	ICC19 IM
W76EGX023X122	16/9 32"SF INVAR BSVM	CT 19151 34	10520600	10520330	JP915	134V	ICC19 MM
W66EGV023X122	16/9 28"SF INVAR BSVM	CT 19251 40	10578550	10576740	JP917	140V	ICC19 MM + IM + PVM (PANORAMA)
W76EGX023X122	16/9 32"SF INVAR BSVM	CT 19251 40	10578550	10576740	JP917	140V	
W76EGV023X122	16/9 32"SF INVAR BSVM	CT 19251 40	10578550	10576740	JP917	140V	
W76EGV023X878	16/9 32"SF INVAR BSVM	CT 19251 40	10578550	10576740	JP917	140V	
W66LPQ356X99	16/9 28"SF INVAR BSVM	CT 19551 40	10604230	10647440	JP917	140V	SCENIUM XF TUBE
W76LPF350X97	16/9 32"SF INVAR BSVM	CT 19551 40	10604230	10647440	JP917	140V	

RP C19

tube name	description	CT-Part		DST	Usys jumper	Usys	Version
RP - 4/3	4/3 46" - 52"	CT 19400 34	10530110	10521310	JP915	134V	RP C19 4/3
RP - 16/9	16/9 52"	CT 19450 34	10615440	10641600	JP915	134V	RP C19 16/9

ICC19 50 Hz

tube name	description	CT-Part		DST	Usys jumper	Usys	Version
A59EGD048X300	4/3 25"SF	CT 19005 31	10510890	10517720	JP915	131V	
A66ECY13X15	4/3 28"MP	CT 19003 32	10351520	10517740	JP914	132V	
A66EHJ 13X 15	4/3 28"MP AK	CT 19003 32	10351520	10517740	JP914	132V	
A68EGD038X300	4/3 29"SF	CT 19005 31	10510890	10517720	JP915	131V	
A80AEJ15X01	4/3 33"MP	CT19006 31	10351840	10517720	JP915	131V	
W66EGV023X115	16/9 28"SF	CT 19032 37	10391010	10517750	JP917	137V	
W76EGX023X115	16/9 32"SF	CT 19032 37	10391010	10517750	JP917	137V	

b16WÄü

U SYS . / REFERENCE TUBE

CONTROLES DES CIRCUITS DE DEVIATION LIGNE

CONTROLES DES CIRCUITS DE DEVIATION TRAME

ICC19 100 Hz - BASIC- / IM- / MM- SCENIUM Version

tube name	description	CT-Part		DST	Usys jumper	Usys	Version
A66EGW 48X322	4/3 28"MP INVAR BSVM	CT 19101 34 CT 19105 37	10362880 10351530	10460360 10468070	JP915 JP914	134V 137V	ICC19 IM ICC19 IM
A59EGD048X322	4/3 25"SF INVAR BSVM	CT 19105 37	10351530	10468070	JP914	137V	ICC19 IM
A68EGD038X322	4/3 29"SF INVAR BSVM	CT 19105 37 CT 19152 37	10351530 10520610	10468070 10510870	JP914 JP914	137V 137V	ICC19 IM ICC19 MM
A66EHJ 48X 12	4/3 28"MP AK; no BSVM	CT 19103 34	10556010	10551170	JP915	134V	ICC19 BASIC
A68EGV038X322	4/3 29"SF SS INVAR BSVM	CT 19155 37	10562010	10551150	JP914	137V	ICC19 IM/MM
A80AJA 16X120	4/3 33"MP INVAR BSVM	CT 19156 37	10561990	10510870	JP914	137V	ICC19 IM
A80EJA 16X122	4/3 33"MP INVAR BSVM	CT 19156 37	10561990	10510870	JP914	137V	ICC19 IM
A90AFX 16X120	4/3 37"MP INVAR BSVM	CT 19156 37	10561990	10510870	JP914	137V	ICC19 IM
W66EGV023X122	16/9 28"SF INVAR BSVM	CT 19111 34	10444810	10468160	JP915	134V	ICC19 IM
W76EGV023X122	16/9 32"SF INVAR BSVM	CT 19111 34	10444810	10468160	JP915	134V	ICC19 IM
W76EGX023X122	16/9 32"SF INVAR BSVM	CT 19151 34	10520600	10520330	JP915	134V	ICC19 MM
W66EGV023X122	16/9 28"SF INVAR BSVM	CT 19251 40	10578550	10576740	JP917	140V	ICC19 MM + IM + PVM (PANORAMA)
W76EGX023X122	16/9 32"SF INVAR BSVM	CT 19251 40	10578550	10576740	JP917	140V	
W76EGV023X122	16/9 32"SF INVAR BSVM	CT 19251 40	10578550	10576740	JP917	140V	
W76EGV023X878	16/9 32"SF INVAR BSVM	CT 19251 40	10578550	10576740	JP917	140V	
W66LPQ356X99	16/9 28"SF INVAR BSVM	CT 19551 40	10604230	10647440	JP917	140V	SCENIUM XF TUBE
W76LPF350X97	16/9 32"SF INVAR BSVM	CT 19551 40	10604230	10647440	JP917	140V	

RP C19

tube name	description	CT-Part		DST	Usys jumper	Usys	Version
RP - 4/3	4/3 46" - 52"	CT 19400 34	10530110	10521310	JP915	134V	RP C19 4/3
RP - 16/9	16/9 52"	CT 19450 34	10615440	10641600	JP915	134V	RP C19 16/9

ICC19 50 Hz

tube name	description	CT-Part		DST	Usys jumper	Usys	Version
A59EGD048X300	4/3 25"SF	CT 19005 31	10510890	10517720	JP915	131V	
A66ECY13X15	4/3 28"MP	CT 19003 32	10351520	10517740	JP914	132V	
A66EHJ 13X 15	4/3 28"MP AK	CT 19003 32	10351520	10517740	JP914	132V	
A68EGD038X300	4/3 29"SF	CT 19005 31	10510890	10517720	JP915	131V	
A80AEJ15X01	4/3 33"MP	CT19006 31	10351840	10517720	JP915	131V	
W66EGV023X115	16/9 28"SF	CT 19032 37	10391010	10517750	JP917	137V	
W76EGX023X115	16/9 32"SF	CT 19032 37	10391010	10517750	JP917	137V	

GENERAL INFORMATION

METHODOLOGY

1 - SWITCHING "ON" THE TV :

- Observe the behaviour of the two-coloured LED: note the various stages and compare them with the normal cycle of events.
By watching this, the point at which the problem arises and the part of the circuit which needs to be investigated can be identified.

2 -TROUBLE SHOOTING PROCEDURE: LED BEHAVIOUR

In certain cases a flashing LED signifies the transmission of an error code message:

LED flashes : message transmission.

Count the flashes : coded into two bursts separated by a pause of 0.7 s and repeated several times.

See the error code table.

This data is more precise than LED colour changes, however, since various fault conditions generate the same error code the information signalled may be imcomplete.

Please Note :
In the service mode, it is possible to consult a record of the last error codes which have occurred in the television set.

3 - FAULT FINDING :

Operation stages 1 and 2: an oscilloscope test is carried out according to two separate processes.

a - The television set operates fully or partially
- Use LED message observation fault finding methods 1 and 2. See also the fault related to fault finding by symptom.

b - The television set goes into permanent or cyclical security mode
- Observe LED behaviour (flashing red, stable orange followed by flashing, etc.).
Select the relevant box in the column (LED behaviour fault finding).

INFORMATION

The ICC19 television will partially operate without the DVT, SOUND, CRT, CHROMA (50 Hz) and VM video (100 Hz) modules remoded.
This point may be useful if the video module causes the TV to switch to security mode.

See the television configuration table.

BEHAVIOUR OF ICC19 WITHOUT CERTAIN MODULES ARE FITTED OR REMOVED

CONFIGURATION				ERROR CODE	ALL VOLTAGES	Signal at pin 19 BV011	Signal at pin 2-4-6 BV001	picture
VM	AM-FM	DVT	CRT					
without	without	without	without (1)	17	ok (1)	no	no	no
with	without	without	without (1)	17	ok (1)	no	no	no
with	with	without	without (1)	39	ok (1)	no	no	no
with	with	with	without (1)	26	ok (1)	ok	no	no
with	without	with	with	17	ok	ok	ok	ok
with	with	without	with	39	ok	ok	ok	ok (2)
without	with	with	with	15	ok	noise	pulse 100Hz	no

(1) : If the CRT is not connected, the voltage across CL046 will increase up to 250V instead 202V, this is due to the lack of a discharge path. Before to reconnecting BL050 and BP110 it is **imperative to discharge** CL046 with a resitor (22k or 33k).

(2) : In this case, the picture will only be visible after 1mn.

SERVICE TIPS

ICC19 16/9 50 Hz CHASSIS
32WS88KE - 28WS78KE - 32WS83KP - 28WS73KD

- ANSPRECHEN DER SCHUTZSCHALTUNG UND ABSCHALTEN DES NETZTEILS BEI VIDEOBETRIEB

Ursache :
Ansprechen der Synchronisationssignal während ein oder zwei Bilder (schlechte Qualität der Videocassette).

Abhilfe :
- Ersetzen sie den Kondensator CL067 100nF 100V durch einen 1µF 63V Bestell-Nr.: 43067772.
- Ergänzen Sie den Melf Widerstand RL066 220kΩ 5% 100mW, Bestell-Nr.: 10328700.

FERNSEHGERÄTE MIT DEM CHASSIS ICC19 (50Hz, 100Hz)

* PERMANENTE STÖRGERÄUSCHE AUS DEN LAUTSPRECHERN IM STAND-BY MODE
- CP120 von 470µF/35V gegen 330µF/25V austauschen (Bestell-Nr. 10448410).

* AUSFALL DES IC TDA8177F IN POSITION IF001

ACHTUNG

Es ist unbedingt darauf zu achten für das Chassis ICC19 das IC TDA8177F (Bestell-Nr. 10352880) zu verwenden. Dieses IC für höhere Lastströme ausgelegt als das IC TDA8177 (Bestell-Nr 15053440). Dieses IC wird in Geräten mit dem Chassis TX92 verwendet.
Im Falle einer Verwechselung fällt das IC nach dem Einschalten aus.

FERNSEHGERÄTE MIT DEM CHASSIS ICC19 100 Hz (STEREO ODER DOLBY STEREO)

- MOIRE ODER SCHWARZE VERTIKALE BALKEN AUF DEM BILDSCHIRM VHF BAND I (NUR ITALIAN)

Ursache :
Übersprechen zwischen Netzteil und Tuner.

Abhilfe :
- Ersetzen Sie den Switch Mode Trafo LP020 durch eine neunen mit der TOCOM-Nr :
- 10553820 (Stereo)
- 10553830 (Dolby stereo).

BETROFFENE GERÄTE/CHASSIS: ICC19 (100HZ)
28WS78M, 28WS78MP, 32WS88ME, 32WS98MP
(nur Geräte mit Serien-Nr. beginnend mit AK3025110)

Symptom/Problem:

- ABHÄNGIG VON DER AUSRICHTUNG DES GERÄTES IM ERDMAGNETFELD IST EINE ROTATION DES BILDES MÖGLICH.
DER EFFEKT IST BEI VIDEOTEXT ODER EINGEBLENDETEN UNTERTITELN BESON DERS SICHTBAR.

Abhilfe:
Abgleich der Erdfeldkorrektur. Der Einsteller (Poti) befindet sich auf der Erdfeldkorrekturplatine (EFC).
Sollte keine Erdfeldkorrekturplatine eingebaut sein, kann diese nachgerüstet werden (Best-Nr. 350 592 70).

CRT BS 19200 - CRT BS 19201

COMPONENT SIDE - CÔTE COMPOSANTS - BESTÜCKUNGSSEITE - LATO COMPONENTI - LADO COMPONENTES

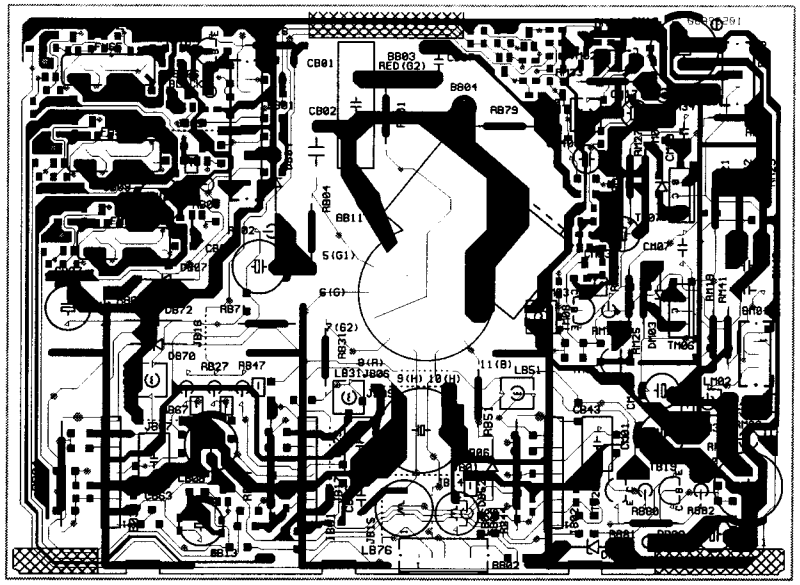

SOLDER SIDE - CÔTE SOUDURES - LÖTSEITE - LATO SALDATURE - LADO SOLDADURAS

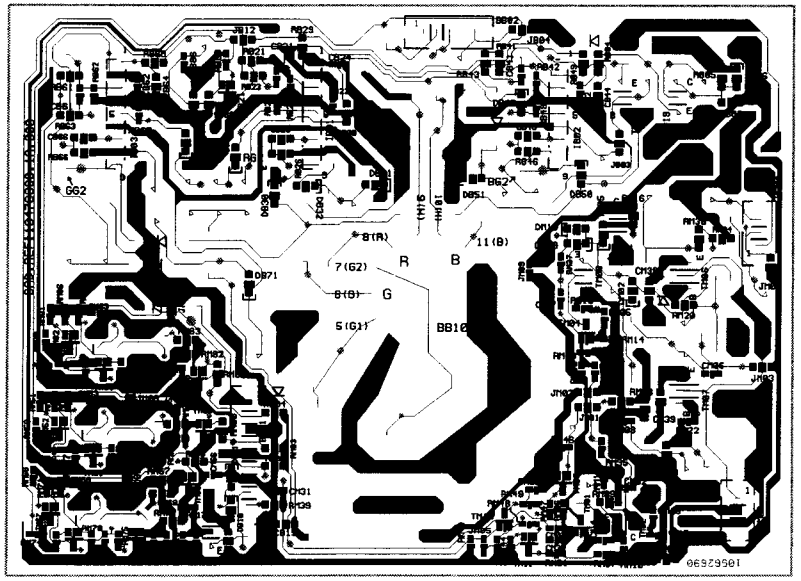

CRT BS 19100 - CRT BS 19400

COMPONENT SIDE - CÔTE COMPOSANTS - BESTÜCKUNGSSEITE - LATO COMPONENTI - LADO COMPONENTES

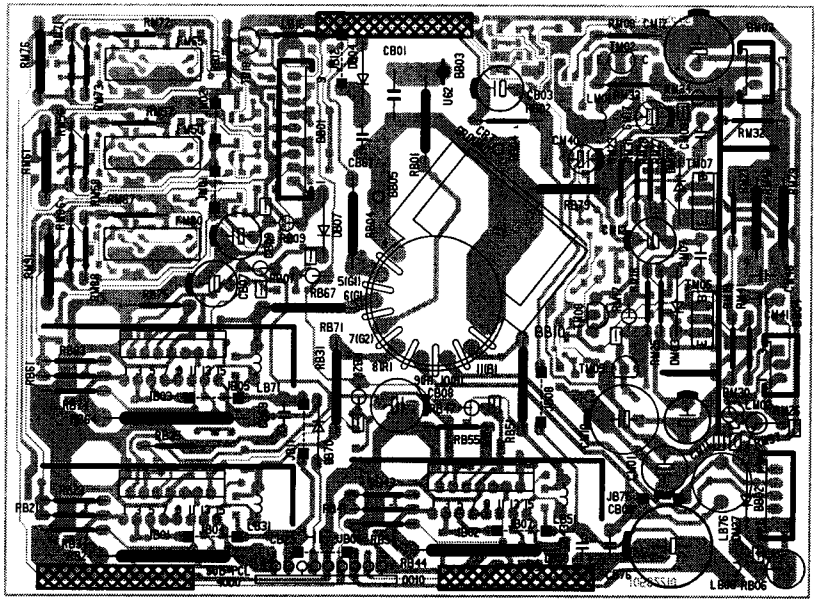

SOLDER SIDE - CÔTE SOUDURES - LÖTSEITE - LATO SALDATURE - LADO SOLDADURAS

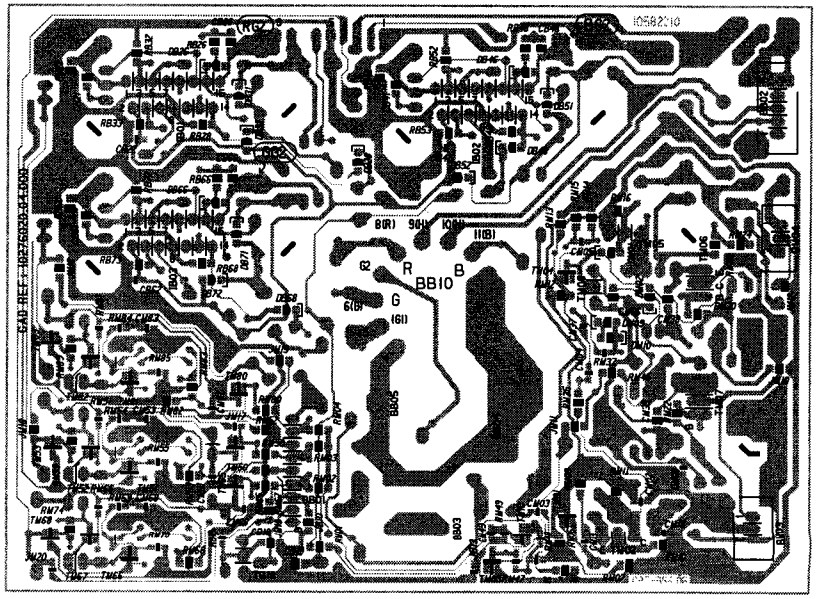

CRT BS 19100 - CRT BS 19400

COMPONENT SIDE - CÖTE COMPOSANTS - BESTÜCKUNGSSEITE - LATO COMPONENTI - LADO COMPONENTES

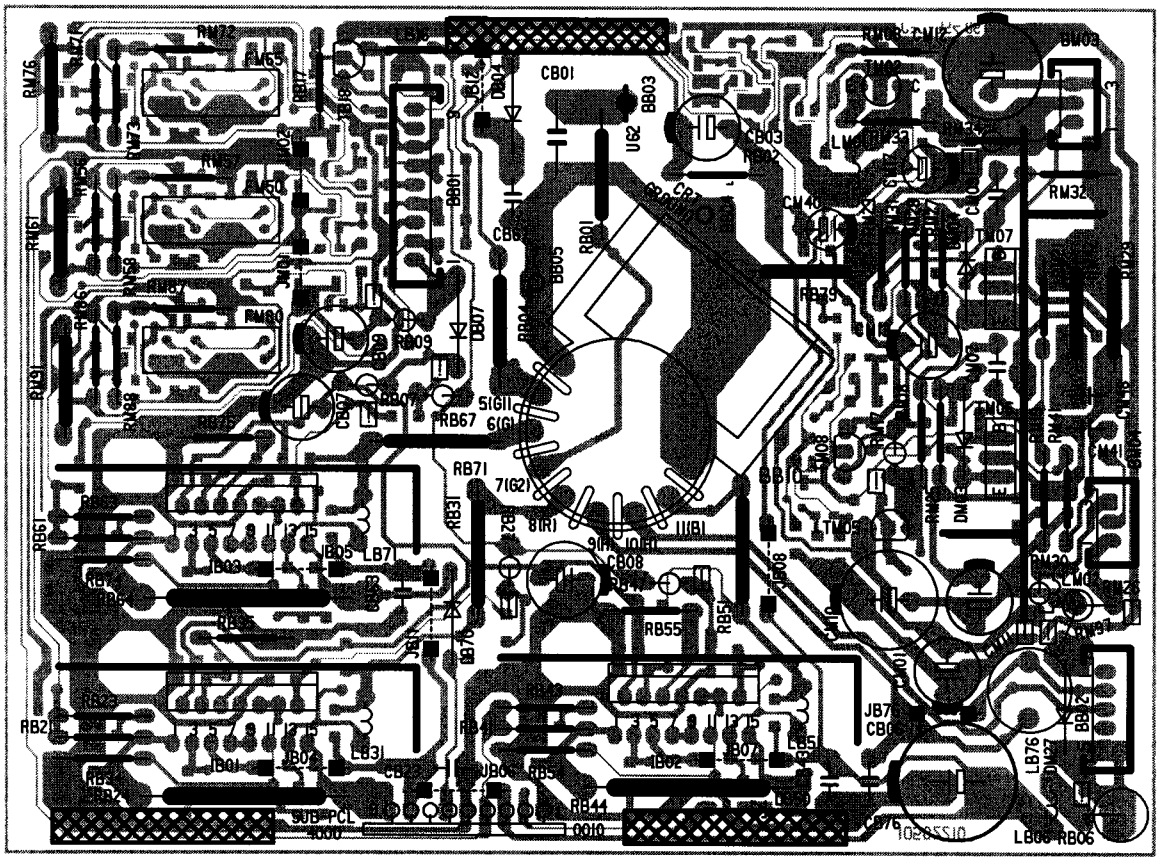

SOLDER SIDE - CÔTE SOUDURES - LÖTSEITE - LATO SALDATURE - LADO SOLDADURAS

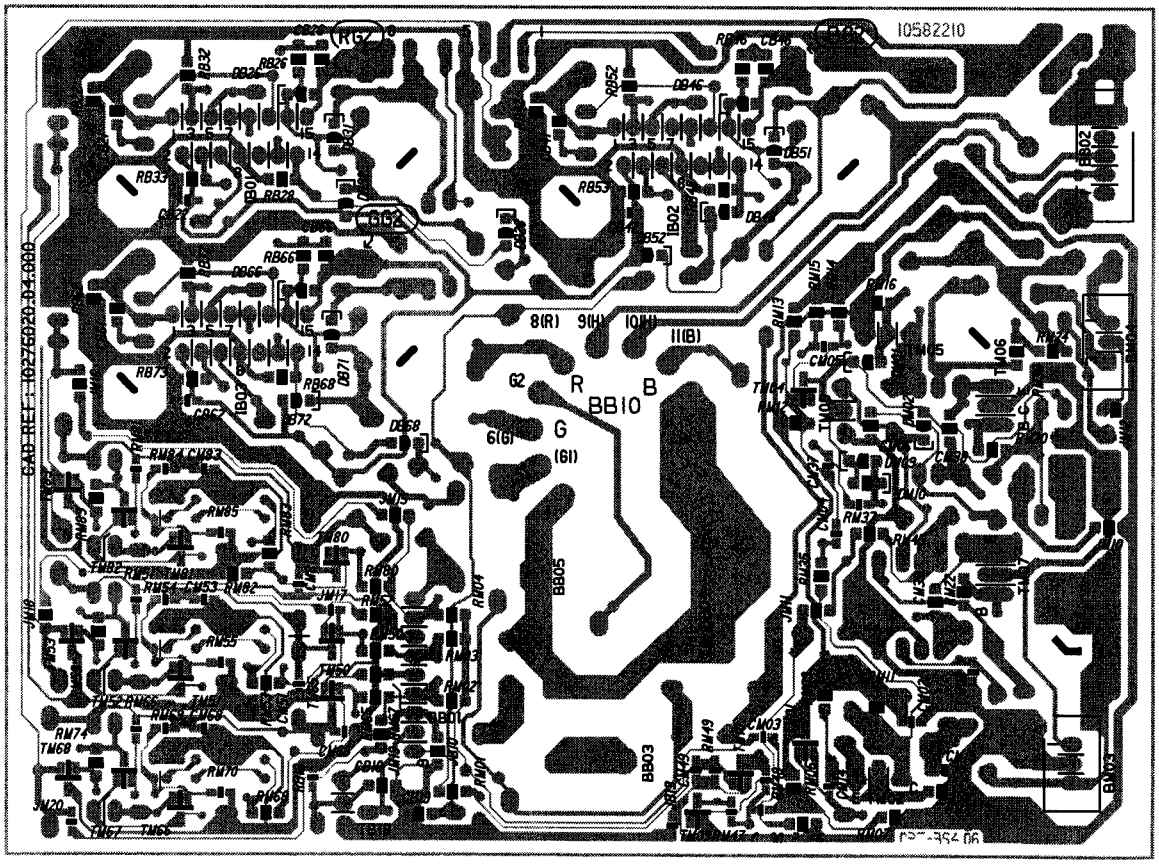

CRT BS 19200 - CRT BS 19201

COMPONENT SIDE - CÔTE COMPOSANTS - BESTÜCKUNGSSEITE - LATO COMPONENTI - LADO COMPONENTES

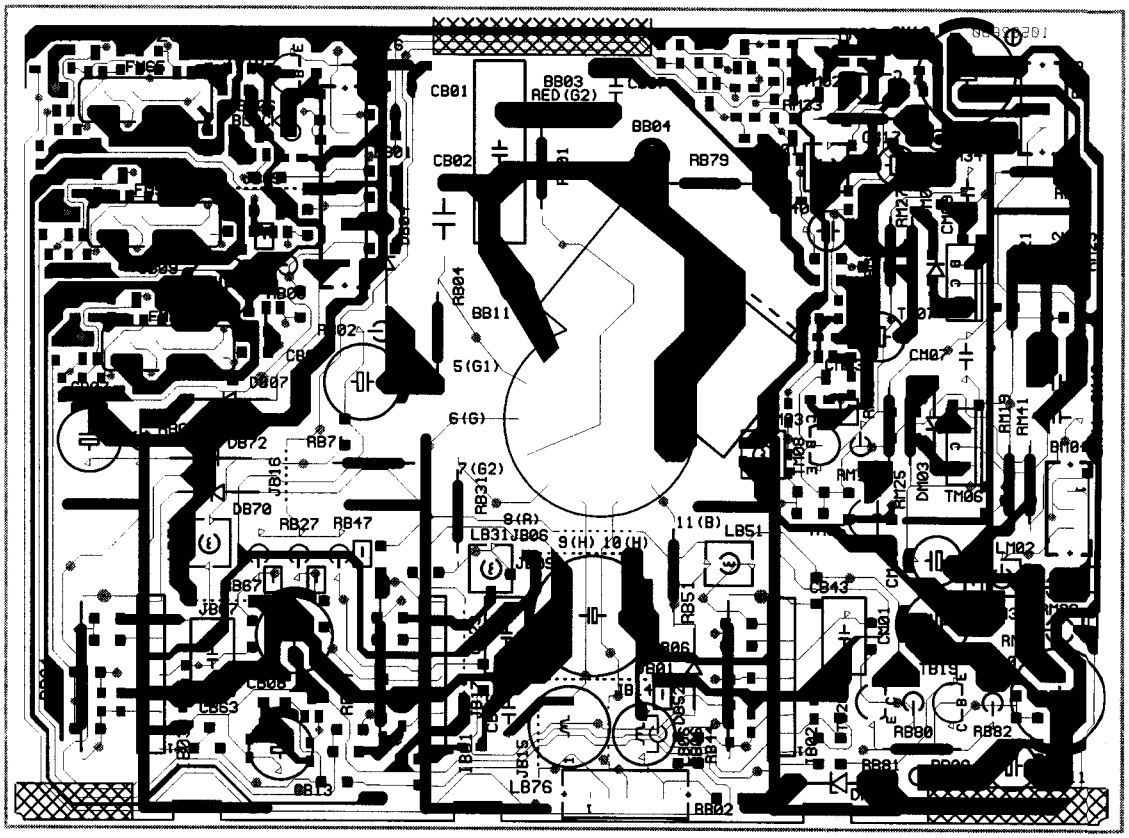

SOLDER SIDE - CÔTE SOUDURES - LÖTSEITE - LATO SALDATURE - LADO SOLDADURAS

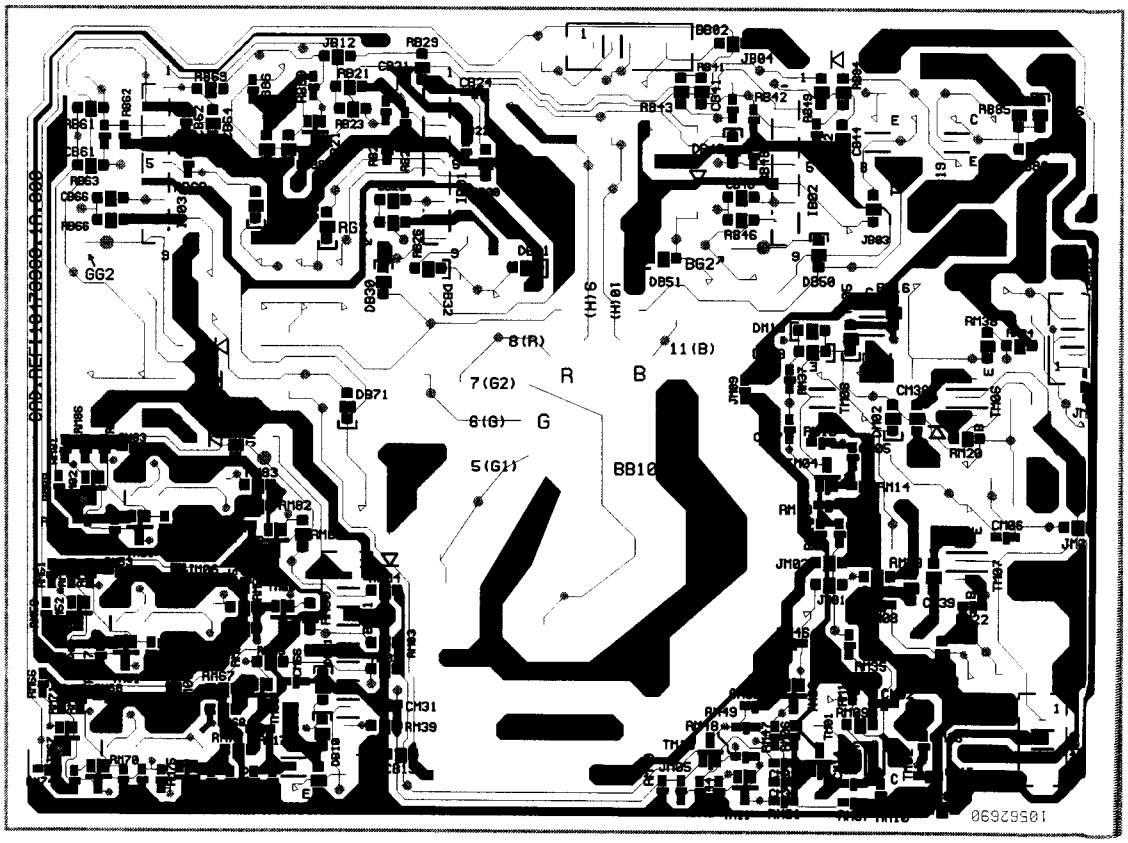

ICC19 100 Hz
First issue 09 / 97

Updated 11 / 9 9

VIDEO AMPLIFIER BOARD - PLATINE AMPLIFICATEURS VIDEO - VIDEOVERSTÄRKERPLATTE - PIASTRA AMPLIFICATORE VIDEO - PLATINA AMPLIFICADOR VIDEO

CRT BS19100

COMPONENT SIDE - CÖTE COMPOSANTS - BESTÜCKUNGSSEITE - LATO COMPONENTI - LADO COMPONENTES

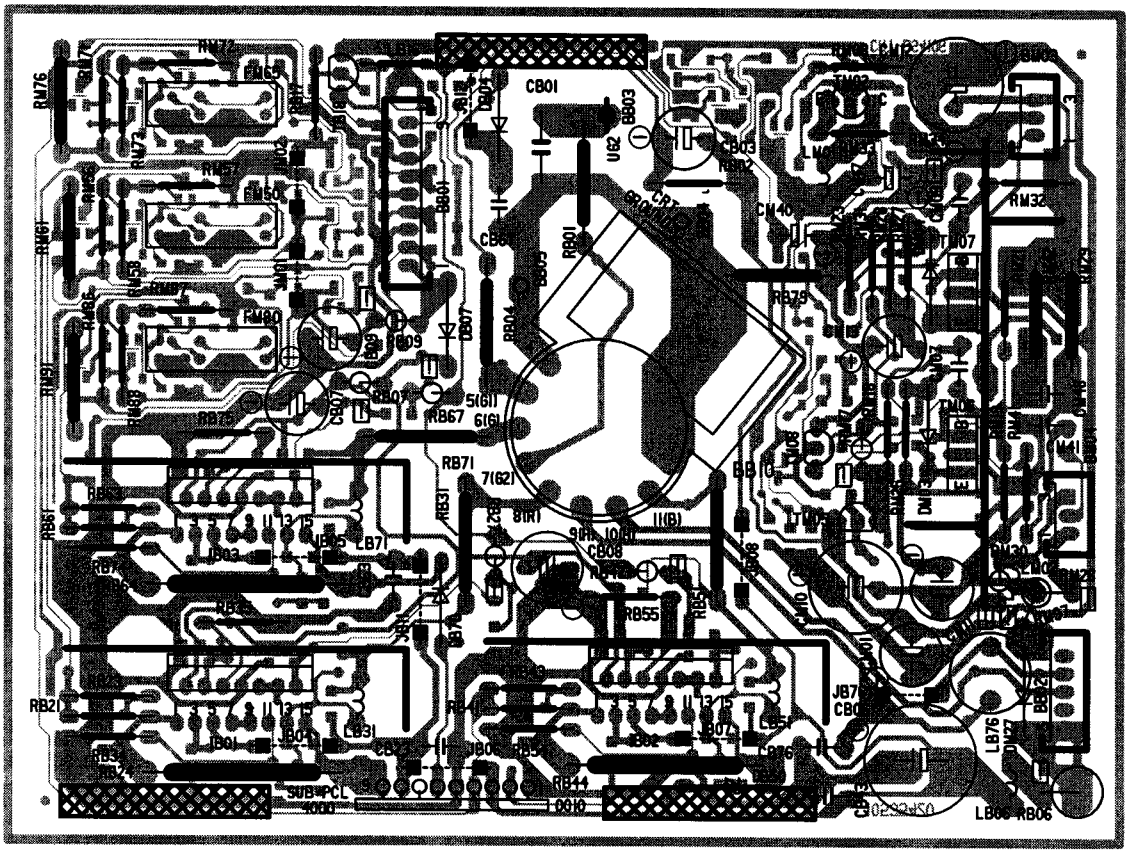

SOLDER SIDE - CÔTE SOUDURES - LÖTSEITE - LATO SALDATURE - LADO SOLDADURAS

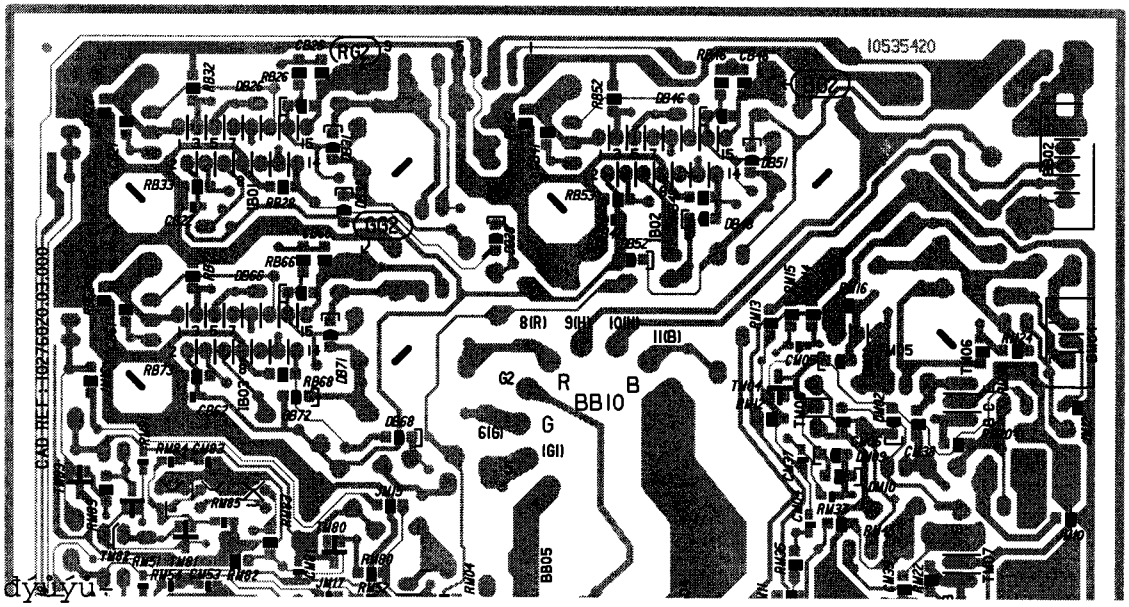

LIST OF ABBREVIATIONS - LISTE DES ABREVIATIONS - ABKÜRZUNGEN
LISTA DELLE ABBREVIAZIONI - LISTA DE ABREVIACIONES

- **AV_R_ OUT** Audio Right-Out
- **AV_I_ OUT** Audio Left-Out
- **AV_R_ IN** Audio Right-In
- **AV_L_ IN** Audio Left-In
- **AV_C_ IN** Chroma-In
- **AV_Y_ IN** Video-In
- **AV_Y_ OUT** Video-Out
- **AV1_8** Pin-8 Detector
- **BEAM_INFO** BEAM CURRENT INFORMATION
- **BG INFO** SWITCH BG
- **B_AV** B SIGNAL FROM AV
- **B_TXT** B SIGNAL FROM TEXTMODULE
- **CRT_B** B SIGNAL TO VIDEO AMPLIFIER
- **CRT_G** G SIGNAL TO VIDEO AMPLIFIER
- **CRT_R** R SIGNAL TO VIDEO AMPLIFIER
- **CVBS_SAT** SAT_VIDEO
- **DEGAUSS** DEGAUSS SIGNAL
- **E.W_DRIVE** EAST - WEST DRIVE SIGNAL
- **EW_BACK** FEED BACK INFORMATION
- **FB_AV** FAST BLANK SIGNAL FROM AV SCART
- **FB DETEC** FAST BLANKING DETECT
- **FB_TXT** FAST BLANK SIGNAL FROM TEXTMODUL
- **FRAME _DR** DRIVE SIGNAL FOR VERTICAL DEFLECTION
- **G_AV** G SIGNAL FROM AV
- **G_TXT** G SIGNAL FROM TEXTMODULE
- **HDFL** HORIZONTAL SYNC.
- **HDRV** DRIVE SIGNAL FOR HORIZONTAL DEFLECTION
- **HTR1 / HTR2** HEATER OUTPUT FROM THE DST TO CRT
- **I CUT** CUT OFF CURRENT
- **IIC-CL-1** I2C CLOCK BUS 1
- **IIC-CL-2** I2C CLOCK BUS 2
- **IIC-DA-1** I2C DATA BUS 1
- **IIC-DA-2** I2C DATA BUS 2
- **IR** INFRARED
- **L1_INFO** STANDARD L BAND 1
- **LDFL** LINE LOCKED CLOCK 27 MHz
- **LDR** LED DISPLAY
- **MAIN _Y** Y FROM CHROMA DECODER
- **MAIN _U** U FROM CHROMA DECODER
- **MAIN _V** V FROM CHROMA DECODER
- **M-RES** MASTER RESET TO MICROPROCESSOR
- **MUTE** MUTES AMPLFIERS
- **NMI** NON MASKABLE INTERRUPT (alternate function of Pin 55 STR092)
- **NORM** SWITCH POLARITY OF THE VIDEO SIGNAL TUNER
- **PLL-ON** ENABLE DEFLECTION PLL
- **PKS** SIGNAL FOR ABL CIRCUIT (STV2161/STV2162)
- **R_AV** R SIGNAL FROM AV
- **R_TXT** R SIGNAL FROM TEXTMODULE
- **SAFE** SAFETY INFORMATION FROM DEFLECTION
- **SMPS_IN** FEED BACK SIGNAL FOR POWER SUPPLY REGULATION (STV2161/2)
- **SSC** SUPER SAND CASTEL CIRCUIT
- **TEMP_ABL** SIGNAL DST-TEMPERATURE SENSING CIRCUIT
- **T1_CVBS** COMPOSITE VIDEO BASEBAND FROM TUNER
- **U_SCART** SCART VOLTAGE
- **+USYS** SYSTEM VOLTAGE
- **+/- US** SOUND VOLTAGE
- **+UVERT** VERTICAL VOLTAGE
- **+UVFB** VERTICAL RETRACE VOLTAGE
- **+UVIDEO** VIDEO VOLTAGE FOR THE CRT BOARD
- **VA** VERTICAL REFERENCE OUT FROM TDA 9143
- **VDFL** VERTICAL SYNC.
- **V-SYNC** VERTICAL SYNC.FOR TELETEXT MODULE
- **5 V** 5V POWER SUPPLY
- **13 V** 12V POWER SUPPLY
- **5 VSTBY** 5V STAND BY
- **10 VSTBY** 10V STAND BY

PARTS LIST
LISTE PIECES DETACHEES
ERSATZTEILLISTE
LISTA PARTI DI RICAMBIO
LISTA DE PIEZAS DE REPUESTO

THOMSON
52RW64E
Chassis ICC19

MODULES

MAIN	**IC19M5MA08P004**		
ABL	**ABLRP19**	**R**	**10637710**
AMVD	**AM/VD19000**	**R**	**10546730**
AMVD	**SUBAMVD19100**		**10546720**
CRT	**CRTRP19 R**	**R**	**10284380**
CRT	**CRTRP19 G**	**R**	**10546590**
CRT	**CRTRP19 B**	**R**	**10529410**
DCU	**DCURP19**	**R**	**10468670**
DVT	**DVT19010**	**R**	**10510420**
EMB	**EMB19500**	**R**	**10600840**
FCB	**FCB1907**	**R**	**25312710**
KDB	**KDB1909**	**R**	**25382560**
LDN	**LDN1907**		**25421050**
PS	**PSRP19**	**R**	**10527240**
RGB	**SUB RGB-PIRP19**	**R**	**10644830**
RIR	**IR1902**	**R**	**25421170**
SCI	**SCI19004**	**R**	**10581460**
VM	**VM19400**	**R**	**10609390**

GR001	TSOP1333	25358570
IA001	TDA7269	10348790
IA002	TDA7298	10348810
IA010,**IB**012, **IG**011,**IL**062	TL082CD FLAT	10364130
IF001	TDA8177F	10352880
II050	TDA9811/V3	10336130
IK001	STV2040	10379540
IK002,003, **IP**002	TL084/CP	46021200
IK004,**IP**130	MC7812/CT	46007600
IK005	MC7805/CT	46025200
IK006	L7912CV	15054150
IK007	M24C32BN1	10462210
IK008,015	X24164	10068250
IP050,**IX**001	MC7809/CT	70401402
IP060	TEA2261	90542470
IP140	TDA8139	10044580
IP250	K324PG(CNY75GA) ⚠	10536210
IR001	ST90R92	10441970
IR002	IC-ROM THOMSON V6.02-1	1061194A
IR003	M24C64-BN1	10533930
IR004	MC14094BD/HEF4094BT/ BU4094BF FLAT	20016020
IR020	C19 M27C160-120F1 V6.01-1	10652940
IR030	GM76G256AL-FW70 FLAT	10271860
IR040	74F02 FLAT	10529250
IS001,060	MC4558CD IC SMD	10276220
IS010	MC78L08ACP	10308410
IS100	MSP8410D-B4 (DIE)	10546420
IS200	DPL3519 (DIE)	10546430
IT001	SDA5275-2S	10449670
IT002	HYB514400BJ-80	10359750
IV001[a]	STV2162 CUT2.2	10529490
IV001[c]	STV2165	10360480
IV300	TDA8755 FLAT	10147010
IV301,302	MSM5412222-25-TS-K FLAT	10389960
IV303	MCU-1 PLUS FLAT	10598370
IV305,308,311	HEF4046BT FLAT	10261110
IV306	LM358D FLAT	10258670
IV312	TS462 FLAT	10606770
IV601	TDA9143N3	10591540
IV602	TDA4665T FLAT	10155740
IV780	HEF4053BT/BU4053BF/ UPD4053BG FLAT	20230300
IX900	TEA6415C	15081290
ZL041	MP160 ⚠	10457130
ZV301	MP50 ⚠	10457120

TA001[b],002[b], 052,054,**TB**001, 002,052,054, **TG**001,002,052, 054	BDW93CFI	10599300
TA001[a],**TI**030, **TP**150,166,190, **TV**001[c],051,053, 063,071,073, 083,382,393, 600,640,660, 680,681,775, 785,**TY**004	BC856B SMD	16006310
TA002[a],006,050, **TB**006,050, **TG**006,050, **TI**031,032,070, **TL**001,062,063, **TP**026,027,152, 161,162,167, 170,175,**TR**002, 102,105,**TV**052, 072,395,601, 603,604,641, 642,661,662, 682,**TX**955,960, 965,**TY**001,002, 003,005	BC846B SMD	16006260
TA003,004,053, 055,**TB**003,004, 053,055,**TG**003, 004,053	BDW94CFI	10599200
TA005,051, **TB**005,051, **TG**005,051, **TK**106,206,306, **TV**002[b]	BF420	16003080
TI010,033,034, 040,045,050, **TP**145,**TR**091, 095,106,**TT**004	BCR141 SMD	16006890
TI020,**TV**307	BF799 SMD	35031670

xxxx[a] : MAIN **xxxx[b] : DCU** **xxxx[c] : VM** **xxxx[d] : KDB**

R : RECYCLED PART
: PIECE RECYCLEE
: AUSTAUSCHTEILE
: RICAMBIO RICICLATO
: MODULO REPROCESADO

For any requests, please contact THOMSON multimedia after sales service area
Pour toutes précisions, contactez votre service apres vente local THOMSON multimedia
Für weitere Auskünfte, wenden Sie sich bitte an die THOMSON multimedia Kundendienste
Per precisazioni, contattare l'assistenza tecnica THOMSON multimedia
Para cualquier pregunta, por favor contactar con el responsable de zona del servicio postventa de THOMSON multimedia

09 / 99 35094280
REV. N° 0 00 / 00 00000000

No copying, translation, modification on other use authorized. All rights reserved worldwide. • Tous droits de reproduction, de traduction, d'adaptation et d'exécution réservés pour tous les pays. • Sämtliche Urheberrechte an diesen Texten und Zeichnungen stehen uns zu. Nachdrucke, Vervielfältigungen - auch auszugsweise - nur mit unserer vorherigen Zustimmung zulässig. Alle Rechte vorbehalten. • I diritti di riproduzione, di traduzione, e esecuzione sono riservati per tutti i paesi. • Derechos de reproduccion, de traduccion, de adaptacion y de ejecucion reservados para todos los paises.

TK001,003,005, 009,027,101, 132,201,232, 301,332,**TS**001, 002,**TT**002,008, 009,010,**TV**006, 007,008,011, 019,020,**TX**620, 622,650,652	BC857B SMD	30946660
TK002,004,020, 022,023,024, 028,130,230, 330,**TM**104,109, 110,204,209, 210,304,309, 310,**TP**001, **TS**003,004, **TT**001,003,006, 007,011,012, **TV**001**b**,003,004, 005,014,**TX**621, 651,830,831, 832,833	BC847B SMD	11070770
TK102,104,202, 204,302,304	BF883S	10162190
TK103,105,203, 205,303,305	BF872	10162200
TK107,207,307, **TM**101,108,201, 208,301,308, **TP**270	BC557B	16001060
TL004	MPSW01A	70436520
TL005	MPS750	16001340
TL028	TIP122FP	25358380
TL030	ON4977/BU2525AX	10461310
TM006	2SA1837	16001500
TM007	2SC4793	16001600
TM102,202,302	BC337-40	45001466
TM105,205,305, **TP**238	BC547B	16000890
TP025	600V 1A25	10353960
TP060	BUL810TH	10224370
TP146	BD241C	16001880
TP220	2SK1460	15046790
TP222	BC327	16000430
TP223,224,271	BC547C	16000900
TR048	BCR185 SMD	16006900
TV002	TIP122	10045750
TV010	2SC3675	16004070
TV108	BC327-40	16000450
TV300	BCP69 SMD	35031480
TV303,381,392	BF660 SMD	16005830
TX505	BC848B SMD	35030590
TX910,920,950, **TZ**050,051	BC546B	45001866

DA001**b**,002**b**, 003,010,011, 050,051,052,059, 060,**DB**001,002, 003,010,011, 050,051,052, 059,060,**DF**001, **DG**001,002,003, 010,011,050, 051,052,060, **DK**001**d**,002**d**,003, 004,013,**DL**092, **DP**027,061,218, 219,223,224, 226,227,231, 232,237,238, 239,268,**DR**091, **DS**001,002,003, **DV**002,003,004, 007,008,009, 010,011,014, 015,020,027, 028,029,**DZ**050	1N4148	44009209
DA001**a**,**DF**002, 028,**DK**005,006, 007,008,102, 106,107,201, 202,206,207, 302,306,307, **DL**070,072, **DM**101,102,105, 106,107,201, 202,205,206, 207,301,302, 305.306.307, **DP**051,060,151, 152,160,175, 178,179,190, **DR**030,031,090, **DT**001,002,003, 004,005,006, 007,008,009, 010,**DV**025,026, 027,028,038, 039,**RV**052	LL4148 SMD	16012450
DA002**a**,**DV**011, 012	LL42 SMD	16012530
DA005,006,053, 058,**DB**005,006, 053,058,**DF**031, 033,**DG**005,006, 053,**DK**001**b**,002**b**, 010,011,012, **DL**001,051,052, **DM**110,111,210, 211,310,311, **DP**050,**DV**005, 006,031,032, 033	RGP10G	10459090
DA008,009,056, 057,**DB**008,009, 056,057,**DG**008, 009,056,**DV**017	BZX55C6V2	20475410
DF007	ZMM15 SMD	16030060
DF011	BZW04-48	10351880
DH001	ZMM33	10376460
DI001,002,040, 041,051,070, 071	BA782S	20542050
DK009	MA2062-A 6V	20707320
DK103,104,113, 203,204,213, 303,304,313	EGP10G	10542140
DK105,205,305	1N4007GP	10455230
DK108,208,308	BZT03/D150	70402351

DL030	DTV32F-1500	10452490
DL032	BYR29F-600	10569340
DL034,036	EGP10D	20953640
DL041,**DP**140	BYW29-150	16009140
DL043	RGP10M	10455320
DL046	RGP15-20	10340890
DL050	BZX85C22	11072690
DL057,**DS**061, 062,**DV**104,108, **DX**120,151,220, 251,301,351	BAV103 SMD	10155030
DL060	ZMM3,3	16030170
DL066	BZX55B47	11073450
DL071	BZX55C20	30948810
DP022,113	FUF4005/MUR160	16009580
DP039,040	RGP02-20	10472330
DP041	BAT42	16007410
DP052,133,134	1N4001	16008160
DP053,261,263	RGP15G	10272800
DP108,109	RGP30D	10455370
DP110A,110B	RGP50M	10298160
DP112	MUR1100E	10360280
DP130	MUR420	16009630
DP201	GBU4M	10474680
DP213	BZX55C33	11073690
DP225	ZPD4,7/BZX55C4V7	20475400
DP233,234,236, 240,243	BA159	16008120
DP235	BZX55C18	11073680
DP265,267	S410D	10527250
DR104	BZX55B9V1	70438220
DV018,019	BYD43-20	10301970
DV101	ZMM6,8 SMD	70439940
DV303,305,307	BB729S SMD	20542090
DV623	BZX84C5V1 SMD	16030330
DX810	BZX55B8V2	40441820
DX814	BZX55B5V1/ZPD5V1 2%	44035702
GE001	TLUV5300 LED	11137650

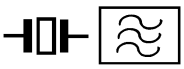

FI010	OFWK3954M FOS	10357610
FI015	OFWG3970M FOS	10512420
FI020	OFWK9453M FOS	10176450
FV001	12M0HZ	10539340
FV640,660		10295430
FV680		10295420
QI053	6M0HZ	48042300
QI070	6M5HZ	20356510
QR001	27M0HZ	10254120
QS040	18M432HZ	10334670
QT001	20M48HZ	10495020
QV601	4M433619HZ	10087710
QV602	3M579545HZ	10087720

FI001	40M4HZ	20300950
FI002	38M9HZ	10319260
FI030	77M8HZ	10348570
FI040	6M6HZ	10437980
FK130,230,330	100NS	10203890

LV326,380	7M96HZ		10519350
LV350	7M96HZ		10519370

PI030,035	2K2 OHM		10308240
PI050	22K0 OHM		10272680
PP267	100R0 OHM		10260330
PS001	1M0 OHM		42045200
PV003,004	1K OHM		42032100
PV101,201,301	2M2 OHM		10174000

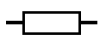

RA001,**RB**001, **RG**001,**RK**057, **RP**003,004,007, 008,011,022	10K0 OHM 1% 0,40W		15010340
RA003,051, **RB**003,051, **RG**003,051	332R0 OHM 1% 0,40W		41289309
RA005,053, **RB**005,053, **RG**005,053	162R0 OHM 1% 0,40W		15011850
RA007,060, **RB**007,060, **RG**007,060	8K87 OHM 1% 0,40W		15021900
RA009,057, **RB**009,057, **RG**009,057	1R8 OHM 1% 1W		13085450
RA012,014,058, 059,**RB**012,014, 058,059,**RG**012, 014,058,059	0R47 OHM 10% 0,40W	⚠	15022650
RA013[b],055, **RB**013,055, **RG**013,055	267K0 OHM 1% 0,40W		15014920
RA013[a],014,030	4R7 OHM 5% 0,35W	⚠	10226310
RA020,064, **RB**020,064, **RG**020,064	2K43 OHM 1% 0,40W		15015580
RA061,**RB**061, **RG**061	8K25 OHM 1% 0,40W		15021840
RF011	1R5 OHM 5% 0,50W	⚠	15022560
RF012	1R82 OHM 1% 0,70W		10451420
RF013	1R21 OHM 1% 0,70W		13010820
RF015	15R0 OHM 265V PTC	⚠	10237730
RF020	270R0 OHM 1% 0,70W		10302230
RK061,065,067, 069	1K0 OHM 1% 0,40W		15012580
RK080	15K0 OHM 1% 0,40W		15011710
RK085	4K75 OHM 1% 0,40W		15018710
RK101,201,301, **RM**117,217,317, **RP**050,**RV**312, 327,393,601	10R0 OHM 5% 0,25W	⚠	15009580
RK104,204,304	47R0 OHM 5% 0,70W	⚠	10181910
RK107,207,307	392R0 OHM 1% 0,40W		15017110
RK112,212,312	2K2 OHM 5% 0,50W	⚠	10239310
RK114,116,118, 120,214,216, 218,220,314, 316,318,320	330R0 OHM 5% 0,50W	⚠	10239250
RK117,217,317, **RL**037	330R0 OHM 10% 0,50W		14050190
RK119,219,319	1K0 OHM 5% 0,50W	⚠	10239280
RK123,124,223, 224,323,324	1K5 OHM 5% 0,50W		10121880
RK129,229,329	6K81 OHM 1% 0,40W		15020590
RK228	47K5 OHM 1% 0,40W		13066180
RL013	4R7 OHM 5% 0,50W	⚠	15010040
RL015	1R0 OHM 5% 0,25W	⚠	15009730
RL029	2R2 OHM 5% 0,50W	⚠	10440420
RL040	0R27 OHM 5% 2,50W		10263600
RL043	2R2 OHM 5% 0,70W	⚠	13000480
RL052	54K9 OHM 1% 0,70W		10224320
RL081	68K1 OHM 1% 0,12W		10433880
RL082	59K0 OHM 1% 0,12W		10516830
RM101,201,301	220R0 OHM 5% 0,25W	⚠	15009810
RP001,023	182K0 OHM 1% 0,40W		15012250
RP009,010	3K32 1% 0,40W		41226709
RP012	39K2 OHM 1% 0,40W		15017130
RP015	8K66 OHM 1% 0,40W		15021880
RP016	8K06 OHM 1% 0,40W		15021810
RP017	7K5 OHM 1% 0,40W		15021220
RP018	5K36 OHM 1% 0,40W		15019620
RP020	0R12 OHM 5% 2,50W	⚠	10334390
RP021	10K2 OHM 1% 0,40W		15010370
RP022	100R0 OHM 5% 4,50W		10379830
RP027	15K4 OHM 1% 0,40W		15011730
RP030	100K OHM 1% 0,40W		15010170
RP031	13K0 OHM 1% 0,40W		15011210
RP032,035	22K1 OHM 1% 0,40W		41303301
RP056,057	1K3 OHM 1% 0,40W		15012810
RP066	3K65 OHM 1% 0,40W		13066710
RP100	10M0 OHM 5% 0,70W	⚠	10074320
RP207	2R7 OHM 5% 4,50W		10379110
RP220,**RV**001	4R7 OHM 5% 2,5W		10471330
RP244	7K15 OHM 1% 0,25W		15021170
RS042	4R7 OHM 5% 0,25W	⚠	35032200
RV069	150K0 OHM 1% 0,40W		41243301
RX503	15R0 OHM 5% 0,25W	⚠	15009630
RZ058	68K1 OHM 1% 0,40W		41307009
RZ059	18K2 OHM 1% 0,40W	R	15012330

CK103,105,107, 203,205,207, 303,305,307	10N0F 10% 400V		15001080
CK117,217,317, **CV**049	1N0F 2K0V		14034870
CK123,223,323	470P0F 10% 3K0V		14006050
CK129,229,329	100N0F 20% 400V		13071240
CL030	1N9F 5% 2K0V	⚠	10559090
CL031	10N0F 3.5% 1K5V		43180300
CL032	20N0F 5% 400V		43388900
CL037	510N0F 5% 250V		10381880
CL041,043	330P0F 20% 1K0V		14035270
CL052	10N0F 5% 400V		14035870
CL146	150P0F 20% 1K0V		30937590
CM148,248,348	470P0F 10% 400V		14002340
CP020	150U0F 385V		43424800
CP022,135,137, 138	470P0F 10% 2K0V		10099390
CP023	2N2F 10% 1K0V		13090980
CP050,053	330P0F 20% 400V		14002220
CP100	1N5F 20% 400V	⚠	10344860
CP101	150P0F 20% 400V	⚠	20738090
CP112	3N3F 5% 630V		10490550
CP201,202	100N0F 20% 275V	⚠	10331520
CP204	1N5F 10% 1K0V		20338740
CP205,206	4N7F 1K0V		10058740
CP209	220U0F 20% 400V		10510680
CP210	22U0F 20% 400V		10114340
CP221	3N3F 20% 1K0V		43324300
CV045,047	4N7F 50% 2K0V		14034420
CV048	820P0F 5% 2K0V		10513370

LL001	DRIVER		10468760
LL008	DSTGDS35	⚠	10641600
LL037	9U0H	⚠	10545340
LP020	SMT57LZ	⚠	10549750
LP070	DRIVER	⚠	60412091
LP201		⚠	10203560
LP250	SMT17	⚠	10534490
LV002			10458460

OTHER PARTS
AUTRES PIECES
SONSTIGE TEILE
ALTRE PARTI
OTRAS PIEZAS

BJ010	CINCH SOCKET PRISE CINCH CINCH-BUCHSE PRESA CINCH TOMA CINCH		10037440
BJ011	SVHS SOCKET PRISE SVHS S-VHS-BUCHSE PRESA SVHS TOMA SVHS		20392900
BK101,201,301	CATHODE RAY TUBE SOCKET SUPPORT TUBE CATHODIQUE BILDROEHRENFASSUNG SUPPORTO TUBO CATODICO SOPORTE T.R.C	⚠	10543870
BQ012	JACK SOCKET PRISE JACK BUCHSE PRESA JACK TOMA JACK		10539510
BS004	CINCH SOCKET PRISE CINCH CHINCH-BUCHSE PRESA CINCH TOMA CINCH		10261740
BX100,200,300	SCART SOCKET PRISE PERITEL EURO-AV-BUCHSE EUROPRESA NORMALIZZATA EUROCONECTOR		10402480
FK101,201,301	63MI0A 250V TIME LAG FUSE 63MI0A 250V FUSIBLE 63MI0A 250V SICHERUNG 63MI0A 250V FUSIBILE 63MI0A 250V FUSIBLE	⚠	25336830
FM102,202,302	63MI0A 250V TIME-LAG FUSE 63MI0A 250V FUSIBLE 63MI0A 250V SICHIERUNG 63MI0A 250V FUSIBILE 63MI0A 250V FUSIBLE	⚠	10566870

FP201	2A5T TIME-LAG FUSE 2A5T FUSIBLE TEMPORISE 2A5T THERMISCHE SICHERUNG 2A5T FUSIBILE TEMPORIZZATO 2A5T FUSIBLE TEMPORIZADO	⚠	10246750
IK007,008,015	IC SUPPORT 2X4 SUPPORT CI 2X4 IC-FASSUNG 2X4 SUPPORTO CI 2X4 SOPORTE CI 2X4		67449100
IR001	IC SUPPORT 4X17 SUPPORT CI 4X17 IC-FASSUNG 4X17 SUPPORTO CI 4X17 SOPORTE CI 4X17		67626900
IR020	IC SUPPORT 2X21 SUPPORT CI 2X21 IC-FASSUNG 2X21 SUPPORTO CI 2X21 SOPORTE CI 2X21		67085500
NH001	CTT5000T UHF/VHF TUNER CTT5000T TETE UHF/VHF CTT5000T UHF/VHF TUNER CTT5000T TUNER UHF/VHF CTT5000T SINTONIZADOR UHF/VHF		20808880
PE130	FOCUS BLOCK 75M0 OHM BLOC FOCUS 75M0 OHM FOCUS BLOCK 75M0 OHM BLOCCO FOCUS 75M0 OHM BLOQUE FOCUS 75M0 OHM	⚠	15249840
PH200	ON/OFF SWITCH CONTACTEUR MARCHE/ARRET EIN-AUS SCHALTER CONTATTORE ACCESO/SPENTO CONTACTOR MARCHA/PARADA	⚠	10276500
PT580	SPARK GAP ECLATEUR FUNKENSTRECKE SPINTEROMETRO EXPLOSOR	⚠	15154190
SK001,002,003,004,005,006,007	MICROSWITCH MICRO CONTACTEUR MIKROSCHALTER MICROINTERRUTTORE MICROCONTACTOR		30011100

EQUIPMENT/PRESENTATION
EQUIPEMENT/PRESENTATION
AUSSTATTUNG/GEHAEUSE
PARTI VARIE
EQUIPO/PRESENTACION

PROTECTIVE CAP, PLASTIC PROTECTEUR PLASTIQUE ABDECKUNG, KUNSTSTOFF PROTEZIONE IN PLASTICA PROTECCION, PLASTICO	35071000
UPPER BOX EMBALLAGE SUPPERIEURE KARTON OBEN IMBALLAGGIO SUPERIORE EMBALAJE SUPERIOR	35070940
FITTING DOWNER FOND DE CARTON POLSTER UNTEN DISTANZIATORE INFERIORE CALZO INFERIOR	10524970
ADAPTER ANTENNA ADAPTATEUR D'ANTENNE ADAPTER ANTENNE ADATTATORE ANTENNA ADAPTADOR ANTENA	10460690
CABINET ASSY COFFRET EQUIPE GEHAEUSE KPL MOBILE COMPLETO MUEBLE EQUIPADO	25397880
REAR PANEL UPPER DOS SUPERIEUR RUECKWAND OBEN PANNELLO POSTERIORE SUPERIORE TAPA POSTERIOR SUPERIOR	⚠ 25418870
REAR PANEL DOWNER DOS INFERIEUR RUECKWAND UNTEN PANNELLO POSTERIORE INFERIORE TAPA POSTERIOR INFERIOR	⚠ 25418880
FRONT COVER ASSY FACADE EQUIPEE FRONTPLATTE KPL PANNELLO FRONTALE COMPLETO PANEL FRONTAL EQUIPADO	25398880
LOGO THOMSON LOGO THOMSON SCHRIFTZUG THOMSON MARCHIO THOMSON LOGOTIPO THOMSON	25388800
LOUDSPEAKER GRID GRILLE HAUT PARLEUR LAUTSPRECHERGITTER GRIGLIA ALTOPARLANTE REJILLA ALTAVOZ	25398900
COVER JACK SOCKET CACHE PRISE JACK ABDECKUNG BUCHSE COPERCHIO PRESA JACK CUBIERTA TOMA JACK	25298150
UNIT FOCUS SUPPORT SUPPORT BLOC FOCUS BLOCK FOCUS HALTER SUPPORTO GRUPPO FOCUS SOPPORTO BLOQUE FOCUS	⚠ 15143370
IR SUPPORT SUPPORT IR HALTER IR SUPPORTO IR SOPORTE IR	⚠ 15162500
8R OHM 20W LOUDSPEAKER 130MM 8R OHM 20W HAUT PARLEUR 130MM 8R OHM 20W LAUTSPRECHER 130MM 8R OHM 20W ALTOPARLANTE 130MM 8R OHM 20W ALTAVOZ 130MM	10316940
8R OHM 15W LOUDSPEAKER 27X42 8R OHM 15W HAUT PARLEUR 27X42 8R OHM 15W LAUTSPRECHER 27X42 8R OHM 15W ALTOPARLANTE 27X42 8R OHM 15W ALTAVOZ 27X42	10317160
ON/OFF BUTTON TOUCHE MARCHE/ARRET EIN AUS TASTE TASTO ACCESO/SPENTO TECLA MARCHA/PARADA	25398850
BUTTON ASSY ENSEMBLE DE TOUCHES TASTENEINHEIT ASSIEME TASTI CONJUNTO DE TECLAS	25398840
HOLDER CONTROL UNIT SUPPORT DE COMMANDES HALTER BEDIENTEIL SUPPORTO DI COMANDO SOPORTE DE MANDO	25398520
POWER SUPPLY LEAD CORDON D'ALIMENTATION NETZKABEL CAVO DI ALIMENTAZIONE CABLE DE ALIMENTACION	⚠ 10318870
RETAINING RAIL REGLETTE DE MAINTIEN HALTESCHIENE BARRA DI FISSAGGIO LISTON DE SUJECTION	25433730
SCREEN ECRAN BILDSCHIRM SHERMO PANTALLA	25397190
GLASS PROTECTION VITRE DE PROTECTION GLAS SCHULTZ VETRO DI PROTEZIONE CRISTAL DE PROTECCION	25397180
MIRROR MIROIR SPIEGEL SPECCHIO ESPEJO	25394840
ADHESIVE TAPE FOR 10540360 RUBAN ADHESIF 10540360 KLEBEBAND FUR 10540360 NASTRO ADESIVO POR 10540360 CINTA ADHESIVO POR 10540360	15236120
CATHODE RAY TUBE GREEN TUBE CATHODIQUE VERT FARBBILDROEHRE GRUEN TUBO CATODICO VERDE T.R.C VERDE	15339670
CATHODE RAY TUBE BLUE TUBE CATHODIQUE BLEU FARBBILDROEHRE BLAU TUBO CATODICO AZZURO T.R.C AZUL	15339710
CATHODE RAY TUBE RED TUBE CATHODIQUE ROUGE FARBBILDROEHRE ROT TUBO CATODICO ROSSO T.R.C ROJO	15339700
DEFLECTION YOKE DEVIATEUR ABLENKEINHEIT BOBINA DI DEFLESSIONE DEFLECTOR	10540340
FLEXI BOARD (COIL BSVM) CABLE PLATINE (BOBINE BSVM) KABEL PLATTE (SPULE BSVM) CAVO PIASTRA (BOBINA BSVM) CABLE PLATINA (BOBINA BSVM)	10540360
FITTING UPPER DESSUS DE CARTON POLSTER OBEN DISTANZIATORE SUPERIORE CALZO SUPERIOR	10524990
FITTING RIGHT/LEFT COTE DE CARTON POLSTER RECHTS/LINKS DISTANZIATORE DESTRO/SINISTRO CALZO DERECHA/IZQUIERDA	10524980
FOLDING BOX RP52, CPL EMBALLAGE CARTON RP52 COMPLET KARTON RP52, KPL IMBALLAGGIO CARTONE RP52 EMBALAJE CARTON RP52	35070910
RCT4130 REMOTE CONTROL RCT4130 TELECOMMANDE RCT4130 FERNBEDIENUNG RCT4130 TELECOMANDO RCT4130 TELEMANDO	21016730

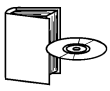

RP19 SERVICE MANUAL EUROPE RP19 DOC TECHNIQUE EUROPE RP19 TECHNISCHE DOKUMENTATION EUROPE RP19 DOCUMENTAZIONE TECNICA EUROPE RP19 DOCUMENTACION TECNICA EUROPE	35064590
RP19 SERVICE MANUAL SUPPLEMENT RP19 DOC TECHNIQUE ADDITIF RP19 TECHNISCHE DOKUMENTATION ZUSATZ RP19 DOCUMENTAZIONE TECNICA ADDITIVO RP19 DOCUMENTACION TECNICA ADITIVO	35089640
CDROM ICC19 VERSION 2 CDROM ICC19 VERSION 2 CDROM ICC19 VERSION 2 CDROM ICC19 VERSION 2 CDROM ICC19 VERSION 2	35075700
52RW64E PARTS LIST 52RW64E LISTA DE PIECES DETACHEES 52RW64E ERSATZTEILLISTE 52RW64E LISTA PARTI DI RICAMBIO 52RW64E LISTA DE PIEZAS DE REPUESTO	35094280
RP C19-S4 UM TH D/F/I/E/GB/NL/S/DK/ PL/CZ/H/SK/RU/GR/P RP C19-S4 NU TH D/F/I/E/GB/NL/S/DK/ PL/CZ/H/SK/RU/GR/P RP C19-S4 BA TH D/F/I/E/GB/NL/S/DK/ PL/CZ/H/SK/RU/GR/P RP C19-S4 IU TH D/F/I/E/GB/NL/S/DK/ PL/CZ/H/SK/RU/GR/P RP C19-S4 IU TH D/F/I/E/GB/NL/S/DK/ PL/CZ/H/SK/RU/GR/P	25424710
52RW64E UM TH D/F/I/E/GB/NL/S/DK/ PL/CZ/H/SK/RU/GR/P 52RW64E NU TH D/F/I/E/GB/NL/S/DK/ PL/CZ/H/SK/RU/GR/P 52RW64E BA TH D/F/I/E/GB/NL/S/DK/ PL/CZ/H/SK/RU/GR/P 52RW64E IU TH D/F/I/E/GB/NL/S/DK/ PL/CZ/H/SK/RU/GR/P 52RW64E IU TH D/F/I/E/GB/NL/S/DK/ PL/CZ/H/SK/RU/GR/P	25392060

The description and characteristics given here are of informative significance only, and non committal. To keep up the high quality of our products, we reserve the right to make any changes or improvement without previous notice. • Les descriptions et caractéristiques figurant sur ce document sont données à titre d'information et non d'engagement. En effet, soucieux de la qualité de nos produits, nous nous réservons le droit d'effectuer, sans préavis, toute modification ou amélioration. • Die Beschreibungen und Daten in dieser Anleitung dienen nur zur Information und sind nicht bindend. Um die Qualität unserer Produkte ständig zu verbessern, behalten wir uns das Recht auf Änderungen vor. • Le descrizioni e le caratteristiche date su questo documento sono fornite a semplice titolo informativo e senza impegno. Ci riserviamo il diritto di eseguire, senza preavviso, qualsiasi modifica o miglioramento. • Las descripciones y características que figuran en este documento se dan a título de información y no de compromiso. En efecto, en bien de la calidad de nuestros productos, nos reservamos el derecho de efectuar, sin previo aviso, cualquier modificación o mejora.

THOMSON multimedia S.A au capital de 12375616000 FF - 46, Quai Alphonse Le Gallo 92648 Boulogne Cedex FRANCE - RCS NANTERRE B 333 773 174